BELLEVUE POND PARK RETROFIT
CAPITAL REGION WATER (CRW)
HARRISBURG, PENNSYLVANIA

CAPITAL REGION WATER

GENERAL NOTES

1. JACOBS SHALL NOT BE RESPONSIBLE FOR CONSTRUCTION, MEANS, METHODS, TECHNIQUES OR PROCEDURES UTILIZED BY THE CONTRACTOR, NOR FOR THE SAFETY OF THE PUBLIC OR THE CONTRACTOR'S EMPLOYEES, OR THE FAILURE OF THE CONTRACTOR TO CARRY OUT THE WORK IN ACCORDANCE WITH THE CONTRACT DOCUMENTS.
2. THE CONTRACTOR IS TO FIELD VERIFY ALL EXISTING UTILITIES AND THEIR ELEVATIONS PRIOR TO STARTING CONSTRUCTION. THE CONTRACTOR SHALL CONTACT THE APPROPRIATE PUBLIC UTILITIES 72 HOURS IN ADVANCE OF ANY CONSTRUCTION ACTIVITIES.
3. STORMWATER AND SEWER CONNECTIONS AND DESIGN ARE TO BE COORDINATED WITH THE CRW.
4. NO WETLANDS ARE INDICATED ON THE NATIONAL INVENTORY WETLAND MAPPING WITHIN THE LIMITS OF DISTURBANCE.
5. THERE ARE NO KNOWN, SINKHOLES, SUBSIDENCE OR ROCK OUTCROPPINGS LOCATED ON THE SITE.
6. THE CONTRACTOR SHALL CONTACT THE PENNSYLVANIA ONE-CALL SYSTEM AT 1-800-242-1776 AT LEAST 3 WORKING DAYS PRIOR TO THE START OF EXCAVATION OR DEMOLITION WORK TO HAVE ALL UNDERGROUND UTILITIES MARKED IN THE AREA.
7. THE CONTRACTOR SHALL MAKE PROVISIONS TO PROTECT ALL SIGNS. ALL AREAS SHALL BE RESTORED TO PRE-CONSTRUCTION CONDITIONS. THE CONTRACTOR SHALL BE RESPONSIBLE FOR ALL RESTORATION, INCLUDING PAVEMENT, LAWN, ETC.
8. ALL CONSTRUCTION MATERIALS AND METHODS SHALL BE IN ACCORDANCE WITH THE PROJECT SPECIFICATIONS AND PA DOT PUBLICATION 408 LATEST EDITION, UNLESS OTHERWISE NOTED.
9. CONTRACTOR SHALL GRADE ALL AREAS TO ENSURE POSITIVE DRAINAGE.
10. CONTRACTOR SHALL PROVIDE PROPER AND NECESSARY EROSION AND SEDIMENTATION CONTROL (E.S.C.) MEASURES.
11. TRENCHING THROUGH EXISTING BITUMINOUS OR CONCRETE SHALL BE NEATLY SAW CUT PRIOR TO REMOVAL. ALL PATCHING SHALL MATCH EXISTING PAVING IN ELEVATION, TEXTURE, MATERIAL AND APPEARANCE.
12. ALL REMOVED OR DISTURBED VEGETATION, SIGNS, ETC. SHALL BE REPLACED UPON COMPLETION AT A LOCATION DESIGNATED BY CRW AND TO THE APPROVAL OF THE OWNER.
13. CONTRACTOR SHALL STAKE OUT LOCATIONS OF NEW STRUCTURES AND GAIN APPROVAL FROM CRW PRIOR TO CONSTRUCTION.
14. CONTRACTOR SHALL ADJUST ALL WATER VALVES, SEWER MANHOLES OR OTHER UTILITIES TO FINAL GRADE, IN ACCORDANCE WITH UTILITY OWNER'S SPECIFICATIONS.
15. ALL WATER AND SEWER INSTALLED SHALL BE CONSTRUCTED IN ACCORDANCE WITH THE CRW STANDARDS AND SPECIFICATION AND CRW PLUMBING CODE.
16. THE CONTRACTOR SHALL BE RESPONSIBLE FOR OBTAINING ALL DEMOLITION AND BUILDING PERMITS FROM THE MUNICIPALITY RELATIVE TO THE CONSTRUCTION PROPOSED ON THE PLAN.
17. THE CONTRACTOR SHALL VERIFY ALL DIMENSIONS ON SITE PRIOR TO CONSTRUCTION.
18. THE CONTRACTOR IS RESPONSIBLE FOR DAILY MAINTENANCE OF E.S.C. MEASURES, PREVENTION OF RUNOFF FROM THE SITE, AND RESTORATION OF THE STREETS TO THEIR ORIGINAL CONDITIONS.
19. EXISTING UTILITIES HAVE BEEN SHOWN IN ACCORDANCE WITH THE BEST AVAILABLE INFORMATION. IT SHALL BE THE CONTRACTOR'S RESPONSIBILITY TO VERIFY AND ALLOW FOR UTILITY RELOCATION AS NEEDED. THE CONTRACTOR SHALL TAKE ALL NECESSARY PRECAUTIONS TO PROTECT THE EXISTING UTILITIES AND TO MAINTAIN UNINTERRUPTED SERVICE. ANY DAMAGE DUE TO THE CONTRACTOR'S NEGLIGENCE SHALL BE IMMEDIATELY AND COMPLETELY REPAIRED AT THE CONTRACTOR'S EXPENSE.
20. PLAN LOCATIONS AND DIMENSIONS SHALL BE STRICTLY ADHERED TO UNLESS OTHERWISE DIRECTED BY THE ENGINEER. SHOULD SUCH PLAN CHANGES BECOME NECESSARY, THEY ARE SUBJECT TO APPLICABLE MUNICIPAL AND COUNTY ORDINANCES AND APPROVALS.
21. THE CONTRACTOR SHALL BE RESPONSIBLE FOR ALL TRAFFIC CONTROL, TRENCH BARRICADING AND COVERING, SHEETING AND SHORING. THE CONTRACTOR'S TRAFFIC CONTROL PLAN SHALL BE APPROVED BY THE CITY.
22. SOLID WASTE DISPOSAL SHALL BE THE RESPONSIBILITY OF THE CONTRACTOR. ALL TRASH SHALL BE STORED IN APPROVED CONTAINERS AND SHALL BE REMOVED BY A WASTE DISPOSAL COMPANY.

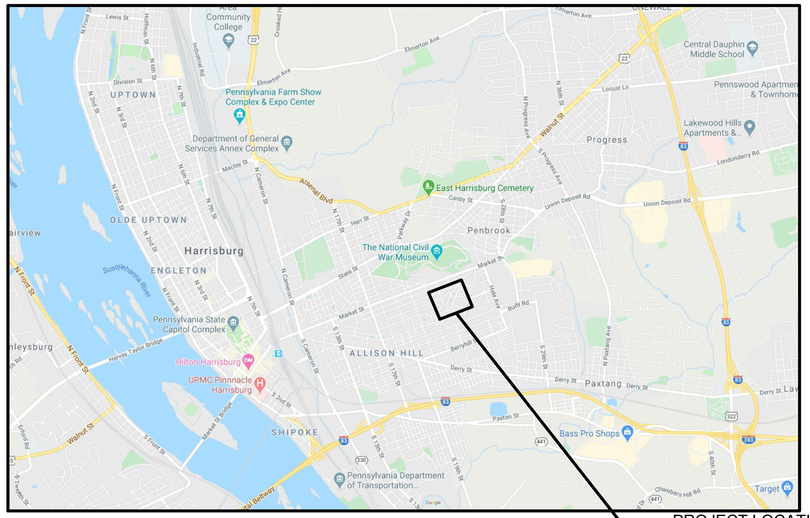

PROJECT LOCATION:
BELLEVUE RD & BRIARCLIFF RD
HARRISBURG, PA 17104

N

LOCATION MAP

SHEET NO.	DRAWING NO.	DESCRIPTION
1	G-1	TITLE SHEET, LOCATION MAP, INDEX TO DRAWINGS AND GENERAL NOTES
2	G-2	ABBREVIATIONS, DESIGNATION LEGENDS AND CIVIL LEGEND
3	C-1	EXISTING CONDITIONS AND DEMOLITION PLAN
4	C-2	EROSION AND SEDIMENT CONTROL PLAN (UPPER POND)
5	C-3	EROSION AND SEDIMENT CONTROL PLAN (LOWER POND)
6	C-4	EROSION AND SEDIMENT NOTES
7	C-5	EROSION AND SEDIMENT DETAILS
8	C-6	GRADING AND STORMWATER PLAN (UPPER POND AND TREATMENT DEVICE)
9	C-7	GRADING AND STORMWATER PLAN (LOWER POND)
10	C-8	LOWER POND SECTION AND PROFILE
11	C-9	DETAILS
12	C-10	DETAILS
13	C-11	DETAILS
14	C-12	DETAILS
15	C-13	DETAILS
16	C-14	LOWER POND SPILLWAY DETAILS
17	C-15	STRUCTURAL DETAILS
18	C-16	STRUCTURAL DETAILS
19	L-1	LANDSCAPE PLAN (UPPER POND)
20	L-2	LANDSCAPE PLAN (LOWER POND)
21	L-3	LANDSCAPE DETAILS
22	L-4	LANDSCAPE SCHEDULE AND NOTES

23. NO VALVES OR OTHER APPURTENANCES OF THE CRW WATER SYSTEM MAY BE OPERATED WITHOUT A CRW EMPLOYEE PRESENT.
24. UNLESS OTHERWISE NOTED, EXISTING TREES ARE TO BE PROTECTED FROM DAMAGE DURING DEMOLITION AND CONSTRUCTION ACTIVITIES AS PER CITY ARBORIST RECOMMENDATIONS.
25. CONTRACTOR SHALL PROVIDE ADEQUATE TEMPORARY FENCING, PAVING, ILLUMINATION AND WARNING DEVICES TO ENSURE SAFETY OF THE PUBLIC.
26. DEMOLITION SHALL INCLUDE THE REMOVAL OF PAVING TO SUBGRADE ELEVATIONS.
27. POST DEMOLITION SUBGRADE SHALL BE FREE OF ORGANIC DEBRIS AND MASONRY/ STONE MATERIALS EQUAL TO OR GREATER THAN 4-INCH DIAMETER.
28. STREET OPENING PERMITS SHALL BE RESPONSIBILITY OF CONTRACTOR. FEES FOR THESE PERMITS WILL BE WAIVED
29. THE CONTRACTOR SHALL ESTABLISH AND MAINTAIN BENCHMARKS AS NECESSARY TO COMPLETE THE PROPOSED. CONTRACTOR SHALL PROVIDE BENCHMARK INFORMATION TO LANDSCAPE ARCHITECT AND ENGINEER AND ALLOW BENCHMARKS TO REMAIN UPON COMPLETION OF THE PROPOSED WORK FOR USE IN FUTURE PHASES.
30. CONTRACTOR SHALL CONTACT THE BELLEVUE PARK ASSOCIATION (BPA) PRIOR TO COMMENCING ALL CONSTRUCTION ACTIVITIES IN THE VICINITY OF EXISTING TREES TO REMAIN.
31. THE CONTRACTOR SHALL NOTIFY BOTH THE CURB AND SIDEWALK AND STREET PAVEMENT INSPECTORS 72 HOURS PRIOR TO THE START OF WORK SO THAT INSPECTIONS CAN BE PERFORMED. ANY CURB, SIDEWALK , PARKING LOT, AND DRIVEWAY CONFIGURATIONS SHALL BE MAINTAINED OR ALTERED ONLY AS APPROVED BY OWNER.
32. DISPOSAL OF ALL MATERIALS IN ACCORDANCE WITH APPLICABLE LOCAL, STATE, AND FEDERAL REGULATIONS SHALL BE THE RESPONSIBILITY OF THE CONTRACTOR.
33. PAVEMENT WORK THAT IS INSTALLED WITHOUT BEING INSPECTED WILL NEED TO BE REDONE AT THE CONTRACTORS EXPENSE.
34. THE CONTRACTOR SHALL ADHERE TO ALL CRW AND THE CITY OF HARRISBURG SPECIFICATIONS FOR THE PROPOSED CONSTRUCTION.
35. ALL SIDEWALK, DRIVEWAY APRONS AND CURB WORK SHALL COMPLY WITH CITY SPECIFICATIONS AND DETAILS. A CURB AND SIDEWALK PERMIT IS REQUIRED AND SHALL BE THE RESPONSIBILITY OF THE CONTRACTOR. FEES WILL BE WAIVED.
36. THE CONTRACTOR IS RESPONSIBLE FOR PROVIDING AS-BUILT DRAWINGS. ASBUILT SURVEY SHALL BE PREPARED BY PA LICENSED SURVEYOR.

PROJECT OWNER:
CLAIRE MAULHARDT
CAPITAL REGION WATER
3003 NORTH FRONT STREET
HARRISBURG, PA 17110
O. 717-216-5269
claire.maulhardt@capitalregionwater.com

DESIGN ENGINEER:
SUSAN BECK, PE, LEEP AP
JACOBS
2301 CHESTNUT STREET
PHILADELPHIA, PA 19103
O. 484-716-1264
susan.beck@jacobs.com

LANDSCAPE ARCHITECT:
BEN EHRHART, PE, CFM
LANDSTUDIES
315 NORTH STREET
LITITZ, PA 17543
O. 717-627-4440
ben1@landstudies.com

100% DESIGN REVIEW SET

Land Studies

Jacobs

100% REVIEW SET - NOT FOR CONSTRUCTION

ABBREVIATIONS

@	AT
ABDN	ABANDONED
ADDL	ADDITIONAL
ADJ	ADJACENT
AL	ALUMINUM
ALTN	ALTERNATE
AMSL	ABOVE MEAN SEA LEVEL
APPROX	APPROXIMATE
APVD	APPROVED
ARV	AIR RELEASE VALVE
ASSY	ASSEMBLY
AVG	AVERAGE
BETW	BETWEEN
BF	BOTTOM FACE
BGS	BELOW GROUND SURFACE
BLDG	BUILDING
BOT	BOTTOM
BRG	BEARING
BV	BUTTERFLY VALVE
C TO C	CENTER TO CENTER
CARV	COMBINATION AIR RELEASE VALVE
CHEM	CHEMICAL
CHK	CHECKED
CI	CAST IRON
CJ	CONSTRUCTION JOINT
CKT	CIRCUIT
CL	CENTER LINE
CLR	CLEAR
CMP	CORRUGATED METAL PIPE
CO	CLEANOUT
CONC	CONCRETE
CONN	CONNECT / CONNECTION
CONST	CONSTRUCTION
CONT	CONTINUED
COR	CORNER
CP	CONCRETE PIPE
CTR	CENTER
CU FT	CUBIC FEET
CU YD	CUBIC YARDS
DBL	DOUBLE
DEG / °	DEGREE
DEMO	DEMOLISH / DEMOLITION
DET	DETAIL
DIA	DIAMETER
DIAG	DIAGONAL
DIM	DIMENSION
DIP	DUCTILE IRON PIPE
DIR	DIRECTION
DISCH	DISCHARGE
DN	DOWN
DP	DISTRIBUTION PANEL
DSGN	DESIGNED
DWG	DRAWING
E	EAST
EA	EACH
EF	EACH FACE
EL	ELEVATION
ELB	ELBOW
ELEC	ELECTRICAL
EQL	EQUAL
EQL SP	EQUALLY SPACED
EQPT	EQUIPMENT
EW	EACH WAY
EX	EXTRACTION WELL
EXST	EXISTING
EXT	EXTERNAL OR EXTERIOR
FACIL	FACILITY
FC	FIELD CLOSURE
FDN	FOUNDATION
F.EXT	FIRE EXTINGUISHER
FED	FEDERAL
FLEX	FLEXIBLE
FLGD	FLANGED
FLR	FLOOR
FNSH	FINISH
FT	FOOT / FEET
G	GAS
GAC	GRANULAR ACTIVATED CARBON
GAL	GALLON
GPD	GALLONS PER DAY
GV	GATE VALVE
GVL	GRAVEL
GW	GROUNDWATER
H OR HGT	HEIGHT
HDPE	HIGH DENSITY POLYETHYLINE
HORIZ	HORIZONTAL
HPT	HIGH POINT ELEVATION
HR	HOUR
HWL	HIGH WATER LEVEL
ID	INSIDE DIAMETER OR IDENTIFICATION
IE	INVERT ELEVATION
IN	INCHES
INSTL	INSTALL
INV	INVERT
JT	JOINT
LB	POUND(S)
LF	LINEAR FEET
LG	LONG
LONG	LONGITUDINAL
MATL	MATERIAL
MAX	MAXIMUM
MECH	MECHANICAL
MFR	MANUFACTURER
MGD	MILLION GALLONS PER DAY
MG/L	MILLIGRAMS PER LITER
MH	MANHOLE
MIN	MINIMUM
MISC	MISCELLANEOUS
MLC	MINI LOAD CENTER
MM	MILLIMETER
MON	MONUMENT
MTRG	METERING
N	NORTH
NIC	NOT IN CONTRACT
N.O.	NORMALLY OPEN
NO.	NUMBER
NOM	NOMINAL
NORM	NORMAL
NTS	NOT TO SCALE
OC	ON CENTER
OD	OUTSIDE DIAMETER
OF	OUTSIDE FACE
OPNG	OPENING
OPP	OPPOSITE
PC	POINT OF CURVATURE
PERF	PERFORATED
PERM	PERMANENT
PI	POINT OF INTERSECTION
PL	PROPERTY LINE
POC	POINT ON CURVE
POT	POINT ON TANGENT
PR	PAIR
PPL	PPL ELECTRIC UTILITIES
PROJ	PROJECT
PROP	PROPERTY
PSF	POUNDS PER SQUARE FOOT
PSI	POUNDS PER SQUARE INCH
PT	POINT OF TANGENCY
PVC	POINT OF VERTICAL CURVATURE OR POLYVINYL CHLORIDE
PVI	POINT OF VERTICAL INTERSECTION
PVMT	PAVEMENT
PVT	POINT OF VERTICAL TANGENCY
QDRNT	QUADRANT
QTY	QUANTITY
QUAL	QUALITY
R	RISER
RAD	RADIUS
RC	REINFORCED CONCRETE
RCP	REINFORCED CONCRETE PIPE
REINF	REINFORCE
RELOC	RELOCATED
REQD	REQUIRED
RMV	REMOVE
RR	RAILROAD
R&R	REMOVE AND REPLACE
R/W	RIGHT-OF-WAY
S	SOUTH
SCHED	SCHEDULE
SD	STORM DRAIN
SDR	STANDARD DIMENSION RATIO
SECT	SECTION
SF	SQUARE FEET
SH	SHEET
SIM	SIMILAR
SPECD	SPECIFIED
SPECS	SPECIFICATIONS
SPG	SPACING
SQ	SQUARE
SS	SANITARY SEWER
ST	STREET
STA	STATION
STD	STANDARD
STL	STEEL
STOR	STORAGE
STR	STRAIGHT
STRUCT	STRUCTURE
SYMM	SYMMETRICAL
TAN	TANGENT LENGTH
T&B	TOP AND BOTTOM
TC	TOP OF CONCRETE
THK	THICK
TG	TOP GRADE
T.O.	TOP OF
TPD	TONS PER DAY
TRANSV	TRANSVERSE
TW	TOP OF WALL
TYP	TYPICAL
UE	UNDERGROUND ELECTRIC
UON	UNLESS OTHERWISE NOTED
V	VALVE
VB	VALVE BOX
VERT	VERTICAL
W	WEST OR WATER
W/	WITH
WL	WATER LINE
WS	WATER SURFACE
YR	YEAR

SECTION / DETAIL DESIGNATIONS

ON DRAWING WHERE SECTION VIEW, OR DETAIL IS TAKEN:

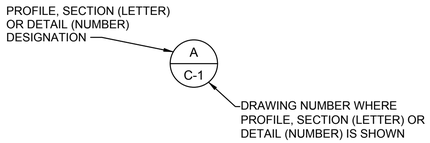

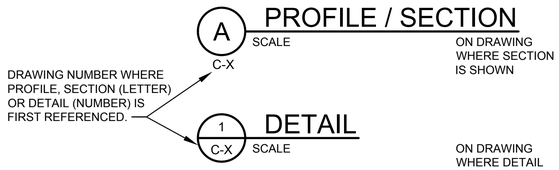

DRAWING TITLE

SCALE

ON DRAWING WHERE ONLY A TITLE IS REQUIRED WITH NO REFERENCE (e.g. PLANS, ELEVATIONS)

SECTION CALLOUT WHERE SECTION CUT IS LESS THAN OR EQUAL TO 3"

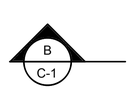

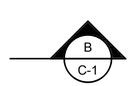

SECTION CALLOUT WHERE SECTION CUT IS GREATER THAN 3"

KEY NOTE

NORTH ARROW

DRAWING NUMBER DESIGNATIONS

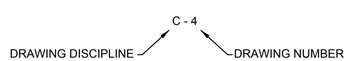

DISCIPLINE LIST:

C	CIVIL
E	ELECTRICAL
G	GENERAL
L	LANDSCAPE

GENERAL NOTE:

1. THIS IS A STANDARD LEGEND SHEET. THEREFORE, NOT ALL OF THE INFORMATION SHOWN MAY BE USED ON THIS PROJECT.

NO.	DATE	DR	CHK	REVISION	BY	APVD
		T LUEHRS	S BECK		A POTTS	

©CH2M HILL 2015. ALL RIGHTS RESERVED.
THIS DOCUMENT, AND THE IDEAS AND DESIGNS INCORPORATED HEREIN, AS AN INSTRUMENT OF PROFESSIONAL SERVICE, IS THE PROPERTY OF CH2M HILL AND IS NOT TO BE USED, IN WHOLE OR IN PART, FOR ANY OTHER PROJECT WITHOUT THE WRITTEN AUTHORIZATION OF CH2M HILL.
REUSE OF DOCUMENTS:

100% REVIEW SET - NOT FOR CONSTRUCTION

CAPITAL REGION WATER

BELLEVUE PARK POND RETROFIT
BELLEVUE PARK
CAPITAL REGION WATER (CRW)
HARRISBURG, PENNSYLVANIA

Jacobs

GENERAL
ABBREVIATIONS AND DESIGNATION LEGENDS

NTS

VERIFY SCALE

BAR IS ONE INCH ON ORIGINAL DRAWING.
0 1"

DATE	OCTOBER 2021
PROJ	D3236600
DWG	G-2
SHEET	2 of 22

Land Studies

FILENAME: G-2_D3236600.dwg PLOT DATE: 10/7/2021 PLOT TIME: 10:50:23 AM

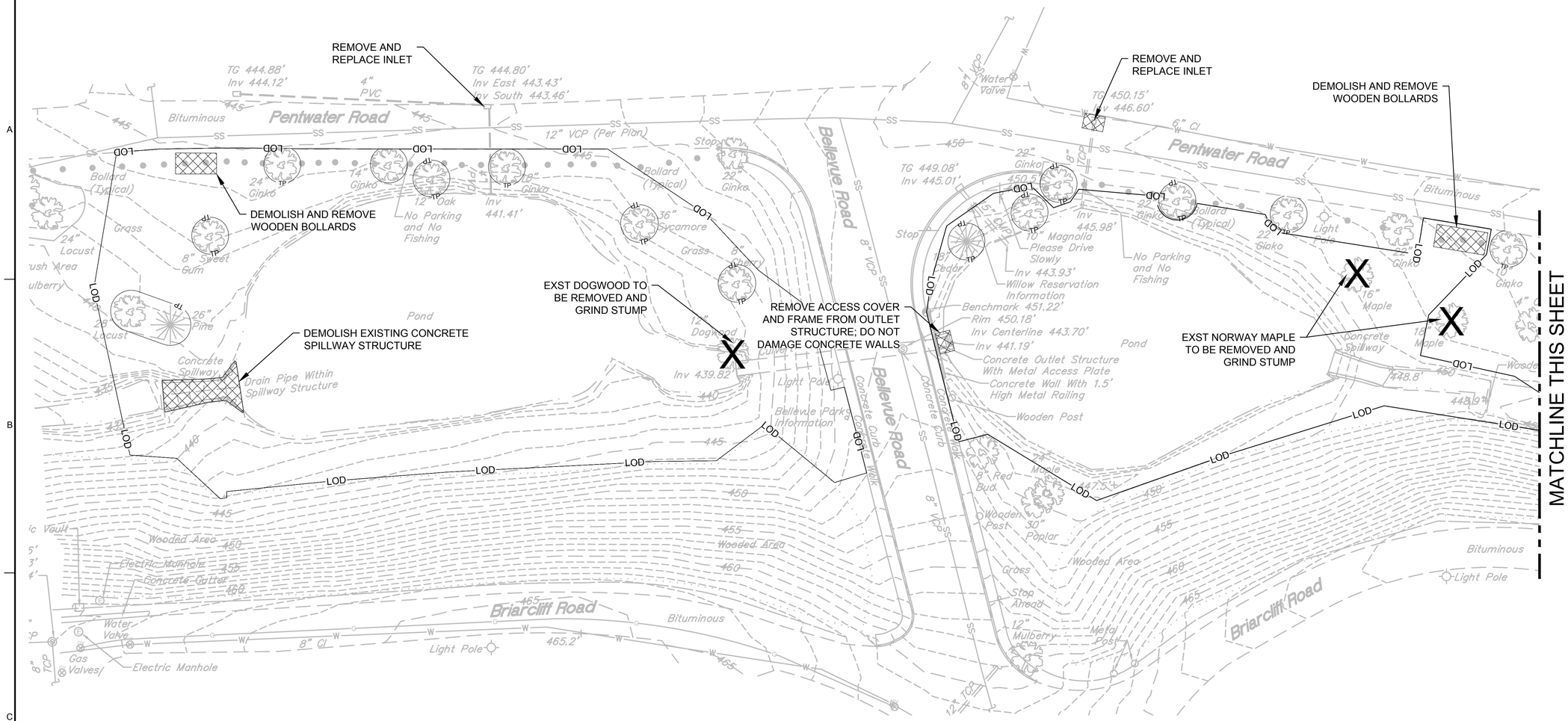

EXISTING CONDITIONS AND DEMO PLAN

1" = 20'

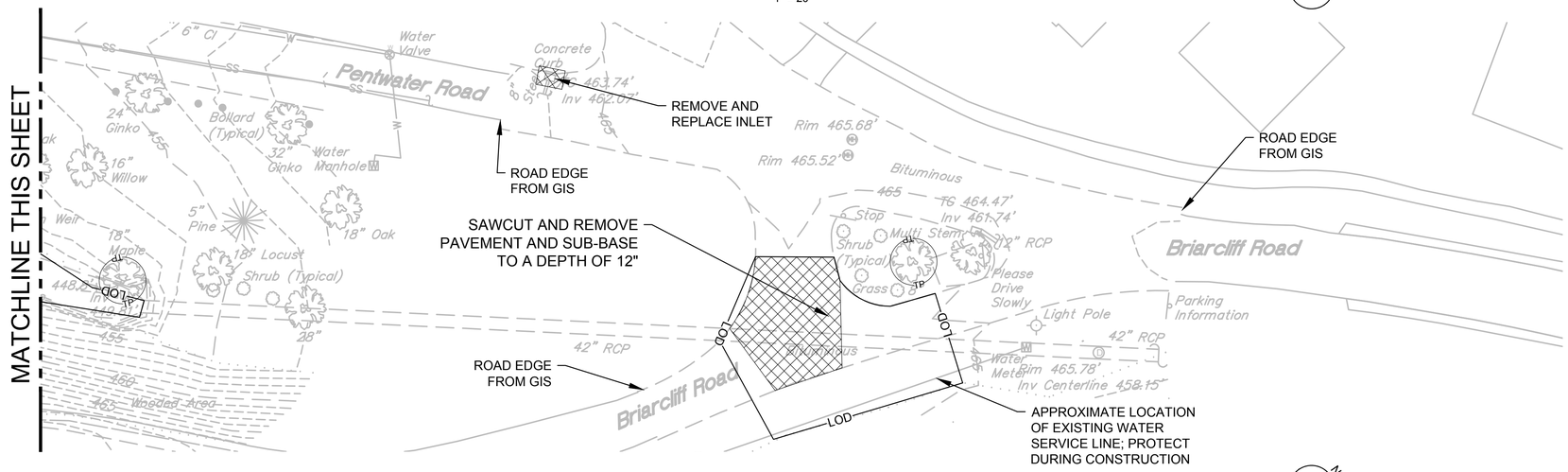

EXISTING CONDITIONS AND DEMO PLAN

1" = 20'

NOTES:

1. SURVEY COMPLETED BY DAWOOD ENGINEERING, INC IN DECEMBER 2019
2. THE NATIONAL WETLANDS INVENTORY FOR PENNSYLVANIA LIST THE LOWER AND UPPER POND AS PUBHh. (PALUSTRINE UNCONSOLIDATED BOTTOM, PERMANENTLY FLOODED, THAT HAS BEEN DIKED IMPOUNDED.)
3. ACCORDING TO COUNTY GIS DATA, THE PROJECT AREA IS NOT LOCATED WITHIN THE 100-YR FLOOD PLAN.
4. THE SITE IS LOCATED ALONG TRIBUTARY 10140 TO PAXTON CREEK.

LEGEND

- LOD — LIMIT OF DISTURBANCE
- TP — TREE PROTECTION FENCE (6 / C-5)
- X — SELECT TREE REMOVAL; GRIND STUMP
- PAVEMENT AND STRUCTURE DEMOLITION

MATCHLINE THIS SHEET

NO.	DATE	DR	REVISION	CHK	APVD	BY	APVD
DSGN	S TURSI	T LUEHRS		S BECK			A POTTS

CAPITAL REGION | WATER

BELLEVUE PARK POND RETROFIT
BELLEVUE PARK
CAPITAL REGION WATER (CRW)
HARRISBURG, PENNSYLVANIA

Jacobs

CIVIL

EXISTING CONDITIONS PLAN

1"=10'
VERIFY SCALE
BAR IS ONE INCH ON ORIGINAL DRAWING. 0 1"

DATE	OCTOBER 2021
PROJ	D3236600
DWG	C-1
SHEET	3 of 22

Land studies

REUSE OF DOCUMENTS: THIS DOCUMENT, AND THE IDEAS AND DESIGNS INCORPORATED HEREIN, AS AN INSTRUMENT OF PROFESSIONAL SERVICE, IS THE PROPERTY OF CH2M HILL AND IS NOT TO BE USED, IN WHOLE OR IN PART, FOR ANY OTHER PROJECT WITHOUT THE WRITTEN AUTHORIZATION OF CH2M HILL.
©CH2M HILL 2015. ALL RIGHTS RESERVED.

100% REVIEW SET - NOT FOR CONSTRUCTION

MATCHLINE SEE SHEET C-3

APPROX LOCATION OF FLOCK SECURITY CAMERA AND SOLAR ARRAY; FIELD VERIFY LOCATION AND PROTECT DURING CONSTRUCTION

COMPOST SOCK SECURED WITH SAND BAGS, TYP

DEWATERING PUMP

DEWATERING HOSE

INSTALL PUMP INTAKE SUMP PIT SEE DETAIL 3/C5

REMOVE METAL ACCESS LID AND CONNECT 36" HDPE INTO CONCRETE CULVERT WITH T-FITTING
INVERT AT OPENING: 446.00'
INVERT AT CULVERT: 441.19

TWO 45 DEGREE BENDS

INSTALL AND SECURE DEWATERING HOSE INSIDE CULVERT TO LOWER POND

45 DEGREE BEND

INSTALL TEMPORARY PIPE SADDLES / SUPPORTS AS NEEDED; MAINTAIN MIN SLOPE OF 0.4%

270 LF OF 36" HDPE
AVERAGE SLOPE = 1.4%

45 DEGREE BEND

22.5 DEGREE BEND

ROCK CONSTRUCTION ENTRANCE

TREE PROTECTION FENCE, TYP

TEMPORARILY GROUT AND SEAL STORMWATER DIVERSION PIPE TO EXISTING CULVERT
INV = 449.81
CONTRACTOR TO CONFIRM WATER TIGHT SEAL

EROSION AND SEDIMENT CONTROL PLAN

1" = 10'

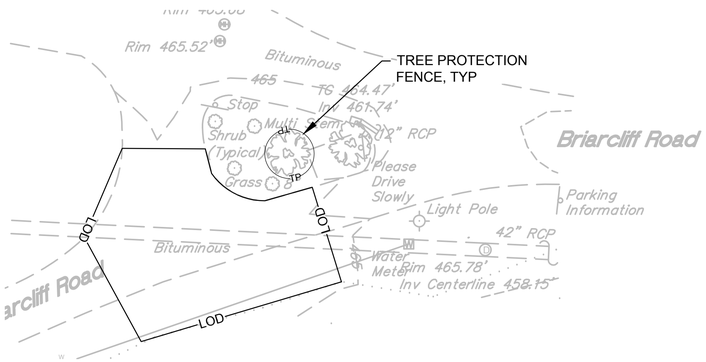

PRETREATMENT FACILTY AREA

1" = 20'

NOTES:

1. WHEN READY TO GRADE SLOPES ON SOUTH SIDE OF POND, RELOCATE DIVERSION PIPE.
2. TREE PROTECTION FENCING SHALL BE INSTALLED WITH A RADIUS EQUAL TO OR GREATER THAN THE TREE DRIP LINE.
3. GRADING SHALL REMAIN OUTSIDE OF TREE PROTECTION FENCING WHERE POSSIBLE. AREAS WHERE GRADING IS NECESSARY, METHODS SUCH AS HAND EXCAVATION / GRADING OR AIR SPADING SHALL BE UTILIZED TO MINIMIZE ROOT DAMAGE.
4. INSTALL 12" COMPOST SOCK A T PIPE INLETS TO POND; REMOVE AND REPLACE AS NEEDED DURING GRADING OPERATIONS.
5. INSTALL TEMPORARY EROSION CONTROL MATTING ON ALL DISTURBED AREAS AND SLOPES INCLUDED ON THE LANDSCAPE PLAN FOLLOWING EXCAVATION AND ROUGH GRADING TO PREVENT EROSION.

LEGEND

- LOD — LIMIT OF DISTURBANCE
- TP — TREE PROTECTION FENCE (6 / C-5)
- DIVERSION PIPE
- ROCK CONSTRUCTION ENTRANCE (1 / C-5)
- COMPOST SOCK (4 / C-5)

NO.	DATE	DSGN	DR	CHK	APVD	BY
		S TURSI	T LUEHRS	S BECK	APVD	A POTTS

REVISION

©CH2M HILL 2015. ALL RIGHTS RESERVED.

THIS DOCUMENT, AND THE IDEAS AND DESIGNS INCORPORATED HEREIN, AS AN INSTRUMENT OF PROFESSIONAL SERVICE, IS THE PROPERTY OF CH2M HILL AND IS NOT TO BE USED, IN WHOLE OR IN PART, FOR ANY OTHER PROJECT WITHOUT THE WRITTEN AUTHORIZATION OF CH2M HILL.

CAPITAL REGION | WATER

BELLEVUE PARK POND RETROFIT
BELLEVUE PARK
CAPITAL REGION WATER (CRW)
HARRISBURG, PENNSYLVANIA

Jacobs

CIVIL

EROSION AND SEDIMENT CONTROL PLAN - UPPER POND

1"=10'

VERIFY SCALE

BAR IS ONE INCH ON ORIGINAL DRAWING.
0 1"

DATE	OCTOBER 2021
PROJ	D3236600
DWG	C-2
SHEET	4 of 22

REUSE OF DOCUMENTS:

100% REVIEW SET - NOT FOR CONSTRUCTION

Land Studies

FILENAME: C-2_D3236600.dwg PLOT DATE: 10/7/2021 PLOT TIME: 3:37:35 PM

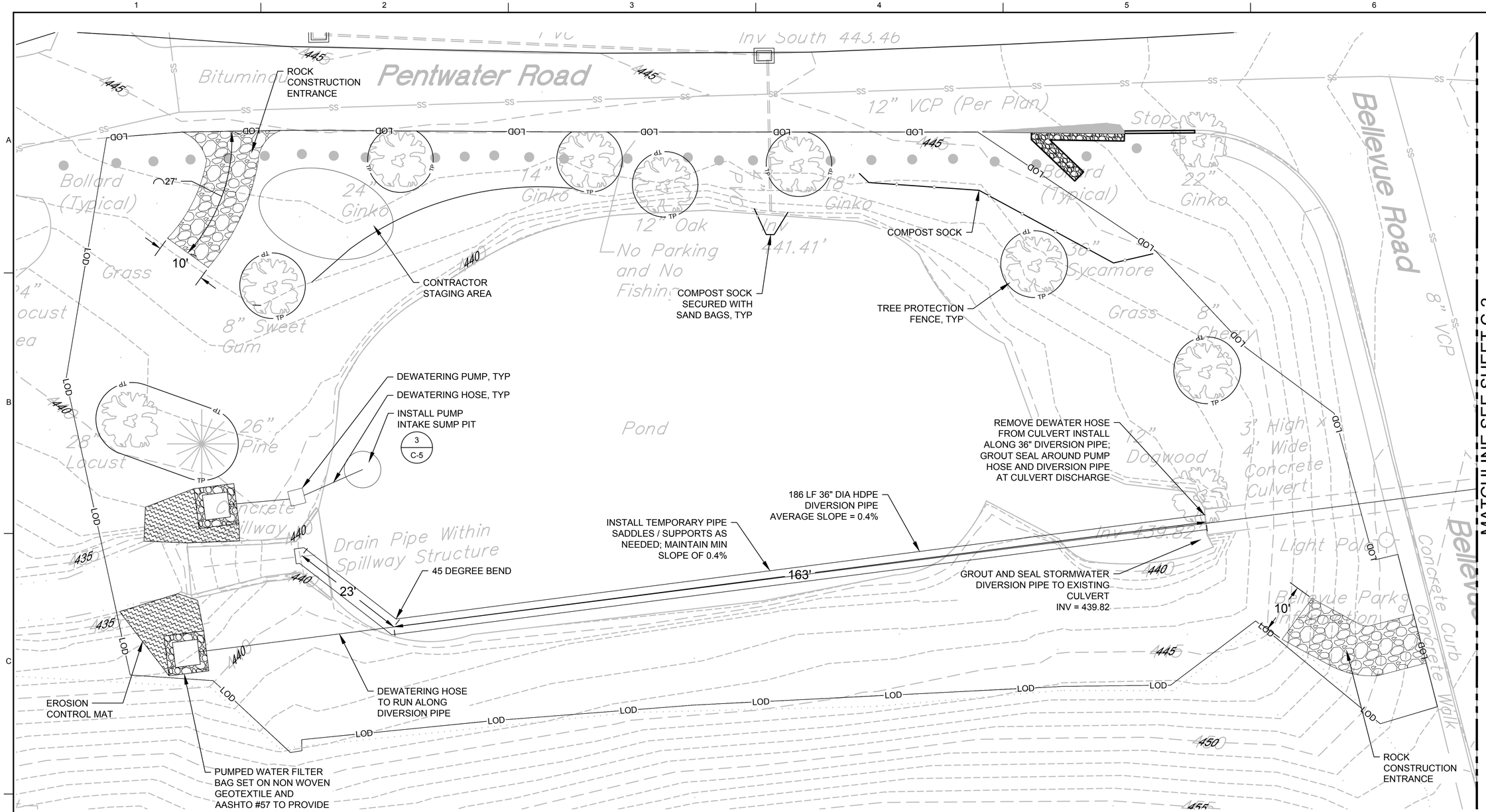

EROSION AND SEDIMENT CONTROL PLAN

1" = 10'

LEGEND

LOD	LIMIT OF DISTURBANCE
TP	TREE PROTECTION FENCE (6 / C-5)
	DIVERSION PIPE
	ROCK CONSTRUCTION ENTRANCE (1 / C-5)
	COMPOST SOCK (4 / C-5)

NOTES:

1. WHEN READY TO GRADE SLOPES ON SOUTH SIDE OF POND, RELOCATE DIVERSION PIPE.
2. TREE PROTECTION FENCING SHALL BE INSTALLED WITH A RADIUS EQUAL TO OR GREATER THAN THE TREE DRIP LINE.
3. GRADING SHALL REMAIN OUTSIDE OF TREE PROTECTION FENCING WHERE POSSIBLE. AREAS WHERE GRADING IS NECESSARY, METHODS SUCH AS HAND EXCAVATION / GRADING OR AIR SPADING SHALL BE UTILIZED TO MINIMIZE ROOT DAMAGE.
4. INSTALL 12" COMPOST SOCK A T PIPE INLETS TO POND; REMOVE AND REPLACE AS NEEDED DURING GRADING OPERATIONS.
5. INSTALL TEMPORARY EROSION CONTROL MATTING ON ALL DISTURBED AREAS AND SLOPES INCLUDED ON THE LANDSCAPE PLAN FOLLOWING EXCAVATION AND ROUGH GRADING TO PREVENT EROSION.

NO.	DATE	REVISION	BY	APVD

DSGN S TURSI | DR T LUEHRS | CHK S BECK | APVD A POTTS

CAPITAL REGION WATER

BELLEVUE PARK POND RETROFIT
BELLEVUE PARK
CAPITAL REGION WATER (CRW)
HARRISBURG, PENNSYLVANIA

Jacobs

CIVIL

EROSION AND SEDIMENT CONTROL PLAN - LOWER POND

1"=10'

VERIFY SCALE

BAR IS ONE INCH ON ORIGINAL DRAWING.
0 1"

DATE	OCTOBER 2021
PROJ	D3236600
DWG	C-3
SHEET	5 of 22

Land Studies

REUSE OF DOCUMENTS: THIS DOCUMENT, AND THE IDEAS AND DESIGNS INCORPORATED HEREIN, AS AN INSTRUMENT OF PROFESSIONAL SERVICE, IS THE PROPERTY OF CH2M HILL AND IS NOT TO BE USED, IN WHOLE OR IN PART, FOR ANY OTHER PROJECT WITHOUT THE WRITTEN AUTHORIZATION OF CH2M HILL.

©CH2M HILL 2015. ALL RIGHTS RESERVED.

100% REVIEW SET - NOT FOR CONSTRUCTION

FILENAME: C-3 D3236600.dwg PLOT DATE: 10/7/2021 PLOT TIME: 3:43:06 PM

EROSION AND SEDIMENT CONTROL NOTES

1. ALL EARTH DISTURBANCES, INCLUDING CLEARING AND GRUBBING AS WELL AS CUTS AND FILLS SHALL BE DONE IN ACCORDANCE WITH THE APPROVED E&S PLAN. A COPY OF THE DRAWINGS MUST BE AVAILABLE AT THE PROJECT SITE AT ALL TIMES.

2. AT LEAST 7 DAYS PRIOR TO STARTING ANY EARTH DISTURBANCE ACTIVITIES, INCLUDING CLEARING AND GRUBBING, THE OWNER AND/OR OPERATOR SHALL INVITE ALL CONTRACTORS, THE LANDOWNER, A REPRESENTATIVE FROM CRW, THE DESIGN ENGINEER, AND LANDSCAPE ARCHITECT TO AN ON-SITE PRECONSTRUCTION MEETING.

3. AT LEAST 3 DAYS PRIOR TO STARTING ANY EARTH DISTURBANCE ACTIVITIES, OR EXPANDING INTO AN AREA PREVIOUSLY UNMARKED, THE PENNSYLVANIA ONE CALL SYSTEM INC. SHALL BE NOTIFIED AT 1-800-242-1776 FOR THE LOCATION OF EXISTING UNDERGROUND UTILITIES.

4. ALL EARTH DISTURBANCE ACTIVITIES SHALL PROCEED IN ACCORDANCE WITH THE SEQUENCE PROVIDED ON THE PLAN DRAWINGS. DEVIATION FROM THAT SEQUENCE MUST BE APPROVED IN WRITING FROM THE LOCAL CONSERVATION DISTRICT OR BY THE DEPARTMENT PRIOR TO IMPLEMENTATION.

5. AREAS TO BE FILLED ARE TO BE CLEARED, GRUBBED, AND STRIPPED OF TOPSOIL TO REMOVE TREES, VEGETATION, ROOTS AND OTHER OBJECTIONABLE MATERIAL.

6. CLEARING, GRUBBING, AND TOPSOIL STRIPPING SHALL BE LIMITED TO THOSE AREAS DESCRIBED IN EACH STAGE OF THE CONSTRUCTION SEQUENCE. GENERAL SITE CLEARING, GRUBBING AND TOPSOIL STRIPPING MAY NOT COMMENCE IN ANY STAGE OR PHASE OF THE PROJECT UNTIL THE E&S BMPS SPECIFIED BY THE BMP SEQUENCE FOR THAT STAGE OR PHASE HAVE BEEN INSTALLED AND ARE FUNCTIONING AS DESCRIBED IN THIS E&S PLAN.

7. AT NO TIME SHALL CONSTRUCTION VEHICLES BE ALLOWED TO ENTER AREAS OUTSIDE THE LIMIT OF DISTURBANCE BOUNDARIES SHOWN ON THE PLAN MAPS. THESE AREAS MUST BE CLEARLY MARKED AND FENCED OFF BEFORE CLEARING AND GRUBBING OPERATIONS BEGIN.

8. TOPSOIL REQUIRED FOR THE ESTABLISHMENT OF VEGETATION SHALL BE STOCKPILED AT THE LOCATION(S) SHOWN ON THE PLAN MAPS(S) IN THE AMOUNT NECESSARY TO COMPLETE THE FINISH GRADING OF ALL EXPOSED AREAS THAT ARE TO BE STABILIZED BY VEGETATION. EACH STOCKPILE SHALL BE PROTECTED IN THE MANNER SHOWN ON THE PLAN DRAWINGS. STOCKPILE HEIGHTS SHALL NOT EXCEED 35 FEET. STOCKPILE SLOPES SHALL BE 2H:1V OR FLATTER.

9. IMMEDIATELY UPON DISCOVERING UNFORESEEN CIRCUMSTANCES POSING THE POTENTIAL FOR ACCELERATED EROSION AND/OR SEDIMENT POLLUTION, THE OPERATOR SHALL IMPLEMENT APPROPRIATE BEST MANAGEMENT PRACTICES TO MINIMIZE THE POTENTIAL FOR EROSION AND SEDIMENT POLLUTION AND NOTIFY THE LOCAL CONSERVATION DISTRICT AND/OR THE REGIONAL OFFICE OF THE DEPARTMENT.

10. ALL BUILDING MATERIALS AND WASTES SHALL BE REMOVED FROM THE SITE AND RECYCLED OR DISPOSED OF IN ACCORDANCE WITH THE DEPARTMENT'S SOLID WASTE MANAGEMENT REGULATIONS AT 25 PA. CODE 260.1 ET SEQ., 271.1, AND 287.1 ET. SEQ. NO BUILDING MATERIALS OR WASTES OR UNUSED BUILDING MATERIALS SHALL BE BURNED, BURIED, DUMPED, OR DISCHARGED AT THE SITE.

11. ALL OFF-SITE WASTE AND BORROW AREAS MUST HAVE AN E&S PLAN APPROVED BY THE LOCAL CONSERVATION DISTRICT OR THE DEPARTMENT FULLY IMPLEMENTED PRIOR TO BEING ACTIVATED.

12. THE CONTRACTOR IS RESPONSIBLE FOR ENSURING THAT ANY MATERIAL BROUGHT ON SITE IS CLEAN FILL. FORM FP-001 MUST BE RETAINED BY THE PROPERTY OWNER FOR ANY FILL MATERIAL AFFECTED BY A SPILL OR RELEASE OF A REGULATED SUBSTANCE BUT QUALIFYING AS CLEAN FILL DUE TO ANALYTICAL TESTING.

13. ALL PUMPING OF WATER FROM ANY WORK AREA SHALL BE DONE ACCORDING TO THE PROCEDURE DESCRIBED IN THIS PLAN, OVER UNDISTURBED VEGETATED AREAS.

14. UNTIL THE SITE IS STABILIZED, ALL EROSION AND SEDIMENT BMPS SHALL BE MAINTAINED PROPERLY. MAINTENANCE SHALL INCLUDE INSPECTIONS OF ALL EROSION AND SEDIMENT BMPS AFTER EACH RUNOFF EVENT AND ON A WEEKLY BASIS. ALL PREVENTATIVE AND REMEDIAL MAINTENANCE WORK, INCLUDING CLEAN OUT, REPAIR, REPLACEMENT, REGRADING, RESEEDING, REMULCHING AND RENETTING MUST BE PERFORMED IMMEDIATELY. IF THE E&S BMPS FAIL TO PERFORM AS EXPECTED, REPLACEMENT BMPS, OR MODIFICATIONS OF THOSE INSTALLED WILL BE REQUIRED.

15. A LOG SHOWING DATES THAT E&S BMPS WERE INSPECTED AS WELL AS ANY DEFICIENCIES FOUND AND THE DATE THEY WERE CORRECTED SHALL BE MAINTAINED ON THE SITE AND BE MADE AVAILABLE TO REGULATORY AGENCY OFFICIALS AT THE TIME OF INSPECTION.

16. SEDIMENT TRACKED ONTO ANY PUBLIC ROADWAY OR SIDEWALK SHALL BE RETURNED TO THE CONSTRUCTION SITE BY THE END OF EACH WORK DAY AND DISPOSED IN THE MANNER DESCRIBED IN THIS PLAN. IN NO CASE SHALL THE SEDIMENT BE WASHED, SHOVELED, OR SWEPT INTO ANY ROADSIDE DITCH, STORM SEWER, OR SURFACE WATER.

17. ALL SEDIMENT REMOVED FROM BMPS SHALL BE DISPOSED OF IN THE MANNER DESCRIBED ON THE PLAN DRAWINGS.

18. AREAS WHICH ARE TO BE TOPSOILED SHALL BE SCARIFIED TO A MINIMUM DEPTH OF 3 TO 5 INCHES — 6 TO 12 INCHES ON COMPACTED SOILS — PRIOR TO PLACEMENT OF TOPSOIL. AREAS TO BE VEGETATED SHALL HAVE A MINIMUM 4 INCHES OF TOPSOIL IN PLACE PRIOR TO SEEDING AND MULCHING. FILL OUTSLOPES SHALL HAVE A MINIMUM OF 2 INCHES OF TOPSOIL.

19. ALL FILLS SHALL BE COMPACTED AS REQUIRED TO REDUCE EROSION, SLIPPAGE, SETTLEMENT, SUBSIDENCE OR OTHER RELATED PROBLEMS. FILL INTENDED TO SUPPORT BUILDINGS, STRUCTURES AND CONDUITS, ETC. SHALL BE COMPACTED IN ACCORDANCE WITH LOCAL REQUIREMENTS OR CODES.

20. ALL EARTHEN FILLS SHALL BE PLACED IN COMPACTED LAYERS NOT TO EXCEED 9 INCHES IN THICKNESS.

21. FILL MATERIALS SHALL BE FREE OF FROZEN PARTICLES, BRUSH, ROOTS, SOD, OR OTHER FOREIGN OR OBJECTIONABLE MATERIALS THAT WOULD INTERFERE WITH OR PREVENT CONSTRUCTION OF SATISFACTORY FILLS.

22. FROZEN MATERIALS OR SOFT, MUCKY, OR HIGHLY COMPRESSIBLE MATERIALS SHALL NOT BE INCORPORATED INTO FILLS.

23. FILL SHALL NOT BE PLACED ON SATURATED OR FROZEN SURFACES.

24. SEEPS OR SPRINGS ENCOUNTERED DURING CONSTRUCTION SHALL BE HANDLED IN ACCORDANCE WITH THE STANDARD AND SPECIFICATION FOR SUBSURFACE DRAIN OR OTHER APPROVED METHOD.

25. ALL GRADED AREAS SHALL BE PERMANENTLY STABILIZED IMMEDIATELY UPON REACHING FINISHED GRADE. CUT SLOPES IN COMPETENT BEDROCK AND ROCK FILLS NEED NOT BE VEGETATED. SEEDED AREAS WITHIN 50 FEET OF A SURFACE WATER, OR AS OTHERWISE SHOWN ON THE PLAN DRAWINGS, SHALL BE BLANKETED ACCORDING TO THE STANDARDS OF THIS PLAN.

26. IMMEDIATELY AFTER EARTH DISTURBANCE ACTIVITIES CEASE IN ANY AREA OR SUBAREA OF THE PROJECT, THE OPERATOR SHALL STABILIZE ALL DISTURBED AREAS. DURING NON-GERMINATING MONTHS, MULCH OR PROTECTIVE BLANKETING SHALL BE APPLIED AS DESCRIBED IN THE PLAN. AREAS NOT AT FINISHED GRADE, WHICH WILL BE REACTIVATED WITHIN 1 YEAR, MAY BE STABILIZED IN ACCORDANCE WITH THE TEMPORARY STABILIZATION SPECIFICATIONS. THOSE AREAS WHICH WILL NOT BE REACTIVATED WITHIN 1 YEAR SHALL BE STABILIZED IN ACCORDANCE WITH THE PERMANENT STABILIZATION SPECIFICATIONS.

27. PERMANENT STABILIZATION IS DEFINED AS A MINIMUM UNIFORM, PERENNIAL 70% VEGETATIVE COVER OR OTHER PERMANENT NON-VEGETATIVE COVER WITH A DENSITY SUFFICIENT TO RESIST ACCELERATED EROSION. CUT AND FILL SLOPES SHALL BE CAPABLE OF RESISTING FAILURE DUE TO SLUMPING, SLIDING, OR OTHER MOVEMENTS.

28. E&S BMPS SHALL REMAIN FUNCTIONAL AS SUCH UNTIL ALL AREAS TRIBUTARY TO THEM ARE PERMANENTLY STABILIZED OR UNTIL THEY ARE REPLACED BY ANOTHER BMP.

29. AFTER FINAL SITE STABILIZATION HAS BEEN ACHIEVED, TEMPORARY EROSION AND SEDIMENT BMPS MUST BE REMOVED OR CONVERTED TO PERMANENT POST CONSTRUCTION STORMWATER MANAGEMENT BMPS. AREAS DISTURBED DURING REMOVAL OR CONVERSION OF THE BMPS SHALL BE STABILIZED IMMEDIATELY. IN ORDER TO ENSURE RAPID REVEGETATION OF DISTURBED AREAS, SUCH REMOVAL/CONVERSIONS ARE TO BE DONE ONLY DURING THE GERMINATING SEASON.

30. FAILURE TO CORRECTLY INSTALL E&S BMPS, FAILURE TO PREVENT SEDIMENT-LADEN RUNOFF FROM LEAVING THE CONSTRUCTION SITE, OR FAILURE TO TAKE IMMEDIATE CORRECTIVE ACTION TO RESOLVE FAILURE OF E&S BMPS MAY RESULT IN ADMINISTRATIVE, CIVIL, AND/OR CRIMINAL PENALTIES BEING INSTITUTED BY THE DEPARTMENT AS DEFINED IN SECTION 602 OF THE PENNSYLVANIA CLEAN STREAMS LAW. THE CLEAN STREAMS LAW PROVIDES FOR UP TO $10,000 PER DAY IN CIVIL PENALTIES, UP TO $10,000 IN SUMMARY CRIMINAL PENALTIES, AND UP TO $25,000 IN MISDEMEANOR CRIMINAL PENALTIES FOR EACH VIOLATION.

SEQUENCE OF CONSTRUCTION

ALL EARTH DISTURBANCE ACTIVITIES SHALL PROCEED IN ACCORDANCE WITH THE FOLLOWING SEQUENCE. EACH STEP OF THE SEQUENCE SHALL BE COMPLETED BEFORE PROCEEDING TO THE NEXT STEP, EXCEPT WHERE NOTED. DREDGING MUST BE COMPLETED DURING DEWATERED CONDITIONS.

1. FIELD MARK AND CLEARLY IDENTIFY LIMIT OF DISTURBANCE AND ENVIRONMENTALLY SENSITIVE AREAS
2. REMOVE THE NECESSARY BOLLARDS AND INSTALL ROCK CONSTRUCTION ENTRANCES
3. INSTALL TREE PROTECTION FENCE, COMPOST FILTER SOCK AND DIVERSION FENCE AS SHOWN ON PLANS
4. ATTEMPT TO LOCATE LOW FLOW ORIFICE IN LOWER POND SPILLWAY TO BEGIN DEWATERING OF LOWER POND
5. CLEAR AND GRUB IN LOCATION OF PERIMETER CONTROLS AT UPPER POND AND INSTALL 36" DIVERSION PIPE AS SHOWN ON PLANS FOR THE UPPER POND
6. INSTALL DEWATERING PUMP IN THE DEEPEST PART OF THE UPPER POND NEAR THE OUTLET STRUCTURE AS SHOWN ON PLANS
7. INSTALL 36" DIVERSION PIPE AS SHOWN ON PLANS FOR THE LOWER POND. IT MAY BE NECESSARY TO REMOVE A POINT BAR NEAR THE INLET FOR THE LOWER POND. THIS MAY BE DONE WITH AN EXCAVATOR TAKING CARE TO CAUSE MINIMAL DISTURBANCE
8. INSTALL TWO DEWATERING PUMPS ON THE UPSTREAM SIDE OF THE LOWER POND SPILLWAY AND ROUTE OUTLET HOSES TO FILTER BAGS AS SHOWN ON PLANS
9. AS THE TWO PONDS ARE BEING DEWATERED ANY FISHES SHALL BE CAPTURED UTILIZING A SEINE NET OR OTHER NET, PLACED IN 5 GALLON BUCKETS AND RELOCATED
10. WHEN ALL E&S CONTROLS, DIVERSION PIPES, AND DEWATERING PUMPS ARE INSTALLED AND FUNCTIONING PROPERLY AND THE TWO PONDS HAVE BEEN SUFFICIENTLY DEWATERED AND ALLOWED ADEQUATE TIME FOR THE POND SEDIMENTS TO DRY, THE CONTRACTOR MAY COMMENCE DREDGING. DREDGED MATERIAL SHALL BE HAULED OFF SITE AND DISPOSED OF AT A LICENSED SUBTITLE D LANDFILL. SEE SPECIFICATIONS.
11. DREDGING AND SIDE SLOPE GRADING SHALL BEGIN IN THE UPPER POND. SIDE SLOPE GRADING TIE-INS SHALL BE CLEARLY FIELD MARKED. DIVERSION PIPE TO BE RELOCATED AS NEEDED TO PERFORM SLOPE GRADING ON THE SOUTH SIDE OF THE UPPER POND.
12. THE EXISTING OUTLET STRUCTURE IN THE UPPER POND SHALL BE MODIFIED TO INSTALL 12" BUTTERFLY VALVE AND ACTUATOR. .
13. ONCE THE UPPER POND DREDGING AND GRADING IS COMPLETE THE CONTRACTOR SHALL PROCEED TO THE LOWER POND TO COMMENCE THE DREDGING AND SIDE SLOPE GRADING. SIDE SLOPE GRADING TIE-INS SHALL BE CLEARLY FIELD MARKED
14. ONCE THE DREDGING AND SIDE SLOPE GRADING IS COMPLETE THE CONTRACTOR SHALL REMOVE THE EXISTING SPILLWAY STRUCTURE FROM THE LOWER POND AND CONSTRUCT THE PROPOSED BOULDER CASCADE SPILLWAY AND ASSOCIATED GRADING AS SHOWN ON THE PLAN AND DETAILS.
15. ALL DISTURBED AREAS OUTSIDE THE POND LIMITS AND NOT INCLUDED IN THE LANDSCAPE PLANTING PLAN SHALL BE SEEDED AND STABILIZED (SEE LANDSCAPE PLAN NOTES FOR SEED MIX AND RATES)
16. UPON COMPLETION OF STABILIZATION ACTIVITIES, THE DIVERSION PIPES, DEWATERING PUMPS AND E&S CONTROLS MAY BE REMOVED AND THE PONDS ALLOWED TO REFILL

DEWATERING AND DREDGING NOTES

1) DEWATERING SYSTEMS

a) PROVIDE, OPERATE, AND MAINTAIN DEWATERING SYSTEMS OF SUFFICIENT SIZE AND CAPACITY TO PERMIT EXCAVATION AND SUBSEQUENT CONSTRUCTION IN DRY AND TO LOWER AND POND WATER SURFACE LEVEL. CONTINUOUSLY MAINTAIN EXCAVATIONS FREE OF WATER, REGARDLESS OF SOURCE, AND UNTIL EXCAVATED TO FINAL GRADE.

b) THE CONTRACTOR SHALL PUMP OUT OR OTHERWISE REMOVE ANY WATER WHICH MAY BE FOUND IN THE EXCAVATION, AND HE SHALL PROVIDE DRAINAGE DITCHES, UNDER-DRAINS, FLUMES, WELL POINTS, AND PUMPING EQUIPMENT, AS NECESSARY, TO KEEP THE EXCAVATION ENTIRELY CLEAR OF WATER WHILE EXCAVATION OPERATIONS ARE BEING PERFORMED REQUIRING A DRY CONDITION.

c) ALL DISCHARGE RESULTING FROM DE-WATERING OF EXCAVATIONS SHALL BE COLLECTED AND DIVERTED TO FACILITIES FOR REMOVAL OF SEDIMENT. SUCH FACILITIES SHALL BE REVIEWED AND APPROVED BY THE ENGINEER BEFORE THEIR CONSTRUCTION. WATER SHALL BE CONVEYED TO AREAS SPECIFIED BY THE ENGINEER ON-SITE. NO WATER SHALL BE RUN DIRECTLY TO STREAMS OR DRAINS.

2) POND DREDGING

a) PROTECT ADJACENT STRUCTURES AND UTILITIES FROM DAMAGE RESULTING FROM OPERATIONS INCLUDING, BUT NOT LIMITED TO, SETTLEMENT, CONSOLIDATION, DISPLACEMENT, CRACKING, VIBRATION, UNDERMINING, WASHOUT, AND UPLIFT CAUSED BY DREDGING, OR OTHER OPERATION.

b) DREDGING SHALL INCLUDE REMOVAL OF MATERIAL IN DESIGNATED AREAS TO DREDGE LIMITS, DEPTH, LINES, AND GRADE AS SHOWN ON DRAWINGS AND AS PROVIDED ON PLANS.

c) DREDGING SHALL NOT DAMAGE OR PUNCTURE EXISTING POND LINER. POND LINER DEPTH AND LOCATION TO BE LOCATED AND SURVEYED PRIOR TO MECHANICAL DREDGING OPERATIONS. ENGINEER AND OWNER TO BE NOTIFIED IF PROPOSED DREDGING AND POND GRADING LIMIT EXCEEDS EXISTING POND LINER DEPTH.

d) DREDGE MATERIAL CAN BE STOCKPILED IN THE POND TO ALLOW FOR INITIAL PASSIVE DEWATERING. THE DREDGING AND OPERATIONS PLAN MUST OUTLINE METHODS, ON HOW TO DRY UP THE SEDIMENT MORE EFFICIENTLY.

e) DO NOT DISTURB SEDIMENTS OUTSIDE OF DREDGE FOOTPRINT.

f) DREDGING EQUIPMENT PRODUCTION RATE: THE DREDGE PRODUCTION/UNLOADING RATE FOR REMOVAL AND DISPOSAL OF THE DREDGE MATERIAL SHALL BE CAPABLE OF MEETING THE OVERALL PROJECT SCHEDULE.

g) DISPOSAL: THE DREDGED SOIL MATERIAL IS CLASSIFIED AS A NON-RCRA REGULATED (NON-HAZARDOUS) MATERIAL AND SHALL BE DISPOSED OF AT A LICENSED SUBTITLE D LANDFILL. THE SOIL CONTAINS CONTAMINANTS ABOVE PA CLEAN FILL LEVELS AND WOULD NOT MEET THE CRITERIA FOR ON-SITE REUSE. THERE ARE NO SPECIFIC PERMITS REQUIRED TO OBTAIN DISPOSAL INTO A SUBTITLE D LANDFILL; HOWEVER, THE LANDFILL WILL HAVE SPECIFIC PERMITTING REQUIREMENTS TO BE ABLE TO ACCEPT THE SOIL (WASTE CHARACTERIZATION FORM / PA FORM U).

NO.	DATE	REVISION	DR	CHK	APVD	BY	APVD
DSGN			S.TIJERS	T.LIEHRS	S.BECK		A.POTTS

©CH2M HILL 2015. ALL RIGHTS RESERVED.

BELLEVUE PARK POND RETROFIT
BELLEVUE PARK
CAPITAL REGION WATER (CRW)
HARRISBURG, PENNSYLVANIA

REUSE OF DOCUMENTS: THIS DOCUMENT AND THE IDEAS AND DESIGNS INCORPORATED HEREIN, AS AN INSTRUMENT OF PROFESSIONAL SERVICE, IS THE PROPERTY OF CH2M HILL AND IS NOT TO BE USED, IN WHOLE OR IN PART, FOR ANY OTHER PROJECT WITHOUT THE WRITTEN AUTHORIZATION OF CH2M HILL.

Jacobs

CIVIL

EROSION AND SEDIMENT CONTROL NOTES

Land Studies

AS NOTED
VERIFY SCALE
BAR IS ONE INCH ON ORIGINAL DRAWING. 0 1"

DATE	OCTOBER 2021
PROJ	D3236600
DWG	C-4
SHEET	6of 22

100% REVIEW SET - NOT FOR CONSTRUCTION

FILENAME: C-4_D3236600.dwg PLOT DATE: PLOT TIME: 3:51:04 PM

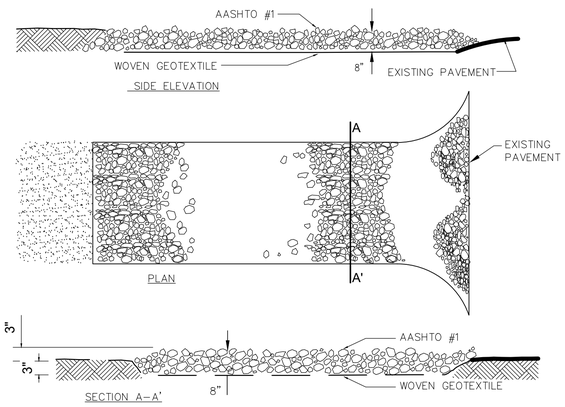

MAINTENANCE: ROCK CONSTRUCTION ENTRANCE THICKNESS SHALL BE CONSTANTLY MAINTAINED TO THE SPECIFIED DIMENSIONS BY ADDING ROCK. A STOCKPILE SHALL BE MAINTAINED ON SITE FOR THIS PURPOSE AT THE END OF EACH CONSTRUCTION DAY, ALL SEDIMENT DEPOSITED ON PAVED ROADWAYS SHALL BE REMOVED AND RETURNED TO THE CONSTRUCTION SITE.

1 ROCK CONSTRUCTION ENTRANCE
NTS

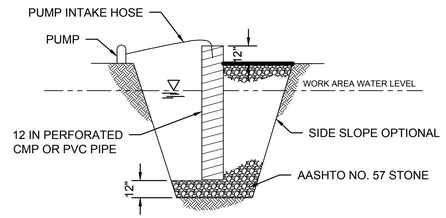

SECTION VIEW

NOTES:
1. LOCATE SUMP AT LOW POINT IN WORK AREA AND OUTSIDE OF CONSTRUCTION ACTIVITY. WHEREVER RUNOFF FROM A WORK AREA FLOWS DIRECTLY TO THE SUMP AREA, A FILTER BAG SHALL BE ATTACHED AT THE DISCHARGE POINT UNLESS PUMPING TO A SEDIMENT BASIN OR SEDIMENT TRAP.
2. MINIMUM DIAMETER OF PIT BOTTOM SHALL BE 24" LARGER THAN PIPE DIAMETER MINIMUM DEPTH OF PIT SHALL BE 24" BELOW WATER LEVEL IN WORK AREA (INCLUDING THE AASHTO #57 STONE). 12" PERFORATED CMP OR PVC PIPE SHALL BE SET ON 12" OF CLEAN AASHTO #57 STONE.
3. VOID SPACE AROUND PIPE SHALL BE FILLED WITH AASHTO #57 STONE. PIPE TO EXTEND 12" MIN. ABOVE TOP OF STONE AND/OR WATER BEING PUMPED FROM WORK AREA.
4. SET PUMP INTAKE INSIDE STANDPIPE.
5. DISCHARGE FROM PUMP SHALL BE TO A STABLE AREA BELOW DISTURBANCES FROM THE WORK ZONE.
6. SUMP MAY BE USED IN CONJUNCTION WITH FILTER BAG WHERE ADDITIONAL FILTERING IS NEEDED.

3 SUMP PIT
NTS

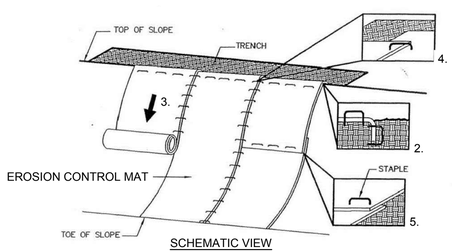

SCHEMATIC VIEW

1. PREPARE SOIL AND PLACE MULCH BEFORE INSTALLING EROSION CONTROL MAT.

2. BEGIN AT THE TOP OF THE SLOPE BY ANCHORING THE MATS IN A 6" DEEP x 6" WIDE TRENCH. BACKFILL AND COMPACT THE TRENCH AFTER STAPLING.

3. ROLL THE MATS DOWN THE SLOPE IN THE DIRECTION OF THE WATER FLOW.

4. THE EDGES OF PARALLEL MATS MUST BE STAPLED WITH APPROXIMATELY 2" OVERLAP.

5. WHEN MATS MUST BE SPLICED DOWN THE SLOPE, PLACE MATS END OVER END (SHINGLE STYLE) WITH APPROXIMATELY 6" OVERLAP. STAPLE THROUGH OVERLAPPED AREA. APPROXIMATELY 12" APART.

6. REFER TO MANUFACTURER'S SPECIFICATIONS FOR STAPLE PATTERN AND SPECIFIC INSTALLATION REQUIREMENTS.

7. ACCEPTABLE PRODUCTS: ANTI-WASH / GEOJUTE BY BELTON INDUSTRIES, OR APPROVED EQUAL.

5 EROSION CONTROL MAT
NTS

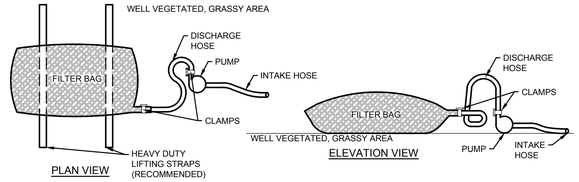

NOTES:

LOW VOLUME FILTER BAGS SHALL BE MADE FROM NON-WOVEN GEOTEXTILE MATERIAL SEWN WITH HIGH STRENGTH, DOUBLE STITCHED "J" TYPE SEAMS. THEY SHALL BE CAPABLE OF TRAPPING PARTICLES LARGER THAN 150 MICRONS. HIGH VOLUME FILTER BAGS SHALL BE MADE FROM WOVEN GEOTEXTILES THAT MEET THE FOLLOWING STANDARDS:

PROPERTY	TEST METHOD	MINIMUM STANDARD
AVG.WIDE WIDTH STRENGTH	ASTM D-4884	60 LB/IN
GRAB TENSILE	ASTM D-4632	205 LB
PUNCTURE	ASTM D-4833	110 LB
MULLEN BURST	ASTM D-3786	350 PSI
UV RESISTANCE	ASTM D-4355	70%
AOS % RETAINED	ASTM D-4751	80 SIEVE

1. A SUITABLE MEANS OF ACCESSING THE BAG WITH MACHINERY REQUIRED FOR DISPOSAL PURPOSES SHALL BE PROVIDED. FILTER BAGS SHALL BE REPLACED WHEN THEY BECOME 1/2 FULL OF SEDIMENT. SPARE BAGS SHALL BE KEPT AVAILABLE FOR REPLACEMENT OF THOSE THAT HAVE FAILED OR ARE FILLED. BAGS SHALL BE PLACED ON STRAPS TO FACILITATE REMOVAL UNLESS BAGS COME WITH LIFTING STRAPS ALREADY ATTACHED.
2. BAGS SHALL BE LOCATED IN WELL-VEGETATED (GRASSY) AREA, AND DISCHARGE ONTO STABLE, EROSION RESISTANT AREAS. WHERE THIS IS NOT POSSIBLE, A GEOTEXTILE UNDERLAYMENT AND FLOW PATH SHALL BE PROVIDED. BAGS MAY BE PLACED ON FILTER STONE TO INCREASE DISCHARGE CAPACITY. BAGS SHALL NOT BE PLACED ON SLOPES GREATER THAN 5%. FOR SLOPES EXCEEDING 5%, CLEAN ROCK OR OTHER NON-ERODIBLE AND NON-POLLUTING MATERIAL MAY BE PLACED UNDER THE BAG TO REDUCE SLOPE STEEPNESS.
3. NO DOWNSLOPE SEDIMENT BARRIER IS REQUIRED FOR MOST INSTALLATIONS. COMPOST BERM OR COMPOST FILTER SOCK SHALL BE INSTALLED BELOW BAGS LOCATED IN HQ OR EV WATERSHEDS, WITHIN 50 FEET OF ANY RECEIVING SURFACE WATER OR WHERE GRASSY AREA IS NOT AVAILABLE.
4. THE PUMP DISCHARGE HOSE SHALL BE INSERTED INTO THE BAGS IN THE MANNER SPECIFIED BY THE MANUFACTURER AND SECURELY CLAMPED. A PIECE OF PVC PIPE IS RECOMMENDED FOR THIS PURPOSE.
5. THE PUMPING RATE SHALL BE NO GREATER THAN 750 GPM OR 1/2 THE MAXIMUM SPECIFIED BY THE MANUFACTURER, WHICHEVER IS LESS. PUMP INTAKES SHALL BE FLOATING AND SCREENED.
6. FILTER BAGS SHALL BE INSPECTED DAILY. IF ANY PROBLEM IS DETECTED, PUMPING SHALL CEASE IMMEDIATELY AND NOT RESUME UNTIL THE PROBLEM IS CORRECTED.

2 PUMPED WATER FILTER BAG
NTS

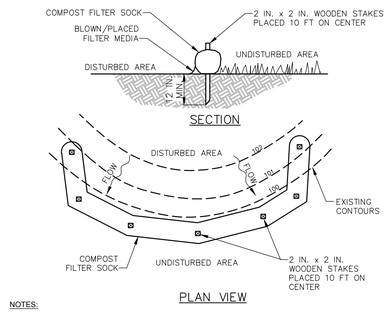

PLAN VIEW

NOTES:

SOCK FABRIC SHALL MEET STANDARDS OF TABLE 4.1 OF THE PA DEP EROSION CONTROL MANUAL. COMPOST SHALL MEET THE STANDARDS OF TABLE 4.2 OF THE PA DEP EROSION CONTROL MANUAL.

COMPOST FILTER SOCK SHALL BE PLACED AT EXISTING LEVEL GRADE. BOTH ENDS OF THE BARRIER SHALL BE EXTENDED AT LEAST 8 FEET UP SLOPE AT 45 DEGREES TO THE MAIN BARRIER ALIGNMENT. MAXIMUM SLOPE LENGTH ABOVE ANY BARRIER SHALL NOT EXCEED THAT SPECIFIED FOR THE SIZE OF THE SOCK AND THE SLOPE OF ITS TRIBUTARY AREA.

TRAFFIC SHALL NOT BE PERMITTED TO CROSS COMPOST FILTER SOCKS.

ACCUMULATED SEDIMENT SHALL BE REMOVED WHEN IT REACHES 1/2 THE ABOVE GROUND HEIGHT OF THE BARRIER AND DISPOSED IN THE MANNER DESCRIBED ELSEWHERE IN THE PLAN.

COMPOST FILTER SOCKS SHALL BE INSPECTED WEEKLY AND AFTER EACH RUNOFF EVENT. DAMAGED SOCKS SHALL BE REPAIRED ACCORDING TO MANUFACTURER'S SPECIFICATIONS OR REPLACED WITHIN 24 HOURS OF INSPECTION.

BIODEGRADABLE COMPOST FILTER SOCKS SHALL BE REPLACED AFTER 6 MONTHS; PHOTODEGRADABLE SOCKS AFTER 1 YEAR. POLYPROPYLENE SOCKS SHALL BE REPLACED ACCORDING TO MANUFACTURER'S RECOMMENDATIONS.

UPON STABILIZATION OF THE AREA TRIBUTARY TO THE SOCK, STAKES SHALL BE REMOVED. THE SOCK MAY BE LEFT IN PLACE AND VEGETATED OR REMOVED. IN THE LATTER CASE, THE MESH SHALL BE CUT OPEN AND THE MULCH SPREAD AS A SOIL SUPPLEMENT.

4 COMPOST SOCK
NTS

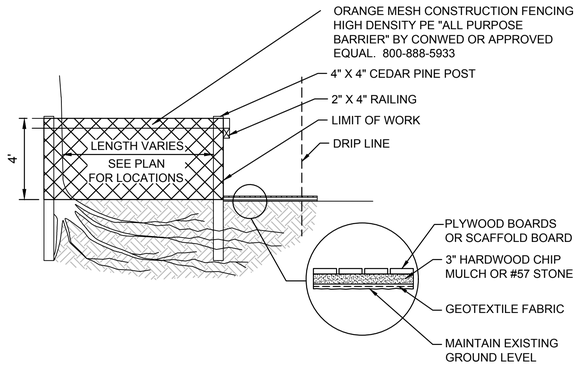

6 TREE PROTECTION DETAIL
NTS

NO.	DATE	DR	REVISION	CHK	BY	APVD
DSGN	S.TURSI	T.LIEHRS		S.BECK	A.POTTS	

BELLEVUE PARK POND RETROFIT
BELLEVUE PARK
CAPITAL REGION WATER (CRW)
HARRISBURG, PENNSYLVANIA

Jacobs

CIVIL

EROSION AND SEDIMENT CONTROL DETAILS

Land Studies

AS NOTED
VERIFY SCALE
BAR IS ONE INCH ON ORIGINAL DRAWING. 0 1"

DATE	OCTOBER 2021
PROJ	D3236600
DWG	C-5
SHEET	7of 22

©CH2M HILL 2015. ALL RIGHTS RESERVED.
THIS DOCUMENT, AND THE IDEAS AND DESIGNS INCORPORATED HEREIN, AS AN INSTRUMENT OF PROFESSIONAL SERVICE, IS THE PROPERTY OF CH2M HILL AND IS NOT TO BE USED, IN WHOLE OR IN PART, FOR ANY OTHER PROJECT WITHOUT THE WRITTEN AUTHORIZATION OF CH2M HILL.
REUSE OF DOCUMENTS:

100% REVIEW SET - NOT FOR CONSTRUCTION

FILENAME: C-5_D3236600.dwg PLOT DATE: PLOT TIME: 3:57:20 PM

MATCHLINE SEE SHEET C-3

MODIFY OUTLET STRUCTURE; REMOVE EXISTING CAST IRON DRAIN VALVE AND RETROFIT EXISTING ORIFICE WITH 12" BUTTERFLY VALVE AND ACTUATOR; SECURE ACTUATOR ROD TO EXISTING CONCRETE WEIR

1 C-11

NEW TYPE M INLET WITH FILTER INSERT AND BICYCLE SAFE GRATE; RECONNECT TO EXISTING 8" TCP
RIM = 450.15
INV = 446.60

3 C-10 5 C-10

BOULDER STEPPING STONES; SEE LANDSCAPE PLANS AND DETAILS

PROPOSED SUBMERGED PLANTING BENCH; SEE LANDSCAPE PLANS

PROPOSED WSE (446.00')

PLACED NATIVE ROCK ENERGY DISSIPATOR; SEE LANDSCAPE PLANS AND DETAILS

INSTALL CMAC CONTROL PANEL WITH POLE MOUNTED SOLAR PANEL AND BATTERY BACKUP; FINAL LOCATION OF POLE AND SOLAR PANEL TO BE APPROVED BY ENGINEER PRIOR TO INSTALLATION

1 C-12

SINGLE BURIED CONDUIT TO CONNECT WITH ACTUATOR AND LEVEL SENSOR

3 C-12

LEVEL SENSOR

3 C-11

STORMWATER PLAN

1" = 10'

NEW TYPE M INLET WITH FILTER INSERT AND BICYCLE SAFE GRATE; RECONNECT TO EXISTING 8" STEEL PIPE
RIM = 463.74
INV = 461.72

3 C-10 5 C-10

FULL DEPTH PAVEMENT REPLACEMENT MATCH EXISTING GRADE AT BOUNDARY WITH EXISTING PAVEMENT

1 C-13

5 LF 18" SDR-35 PVC PIPE @ 1.0% SLOPE

14'X8' HEAVY DUTY PRECAST CONCRETE DIVERSION VAULT WITH 24" DIA ACCESS COVER
18" INLET PIPE INV = 455.77
18" OUTLET PIPE INV = 455.34
TOP OF WEIR EL = 457.27

1 C-10

15'X9' HYDRODYNAMIC SEPARATOR STORMWATER TREATMENT DEVICE
INLET INV = 455.77
OUTLET INV = 455.34

1 C-9

5 LF 18" SDR-35 PVC PIPE @ 1.0% SLOPE

CUT AND REMOVE 14LF 42" RCP SEWER; CONNECT TO PRECAST DIVERSION VAULT
INV IN = 455.77
INV OUT = 455.29

STORMWATER PLAN

1" = 20'

NO.	DATE	DR	CHK	REVISION	BY	APVD
DSGN		S TURSI	T LUEHRS		A POTTS	

S BECK APVD

©CH2M HILL 2015. ALL RIGHTS RESERVED.

DESIGNS INCORPORATED HEREIN, AS AN INSTRUMENT OF PROFESSIONAL SERVICE, IS THE PROPERTY OF CH2M HILL AND IS NOT TO BE USED, IN WHOLE OR IN PART, FOR ANY OTHER PROJECT WITHOUT THE WRITTEN AUTHORIZATION OF CH2M HILL.

THIS DOCUMENT, AND THE IDEAS AND DESIGNS INCORPORATED HEREIN, AS AN INSTRUMENT OF PROFESSIONAL SERVICE, IS THE PROPERTY OF CH2M HILL AND IS NOT TO BE USED, IN WHOLE OR IN PART, FOR ANY OTHER PROJECT WITHOUT THE WRITTEN AUTHORIZATION OF CH2M HILL.

REUSE OF DOCUMENTS:

100% REVIEW SET - NOT FOR CONSTRUCTION

CAPITAL REGION | WATER

Jacobs

BELLEVUE PARK POND RETROFIT
BELLEVUE PARK
CAPITAL REGION WATER (CRW)
HARRISBURG, PENNSYLVANIA

CIVIL
GRADING AND STORMWATER PLAN

Land Studies

1"=10'	
VERIFY SCALE	
BAR IS ONE INCH ON ORIGINAL DRAWING. 0 1"	
DATE	OCTOBER 2021
PROJ	D3236600
DWG	C-6
SHEET	8 of 22

FILENAME: C-6_D3236600.dwg PLOT DATE: 10/7/2021 PLOT TIME: 4:05:18 PM

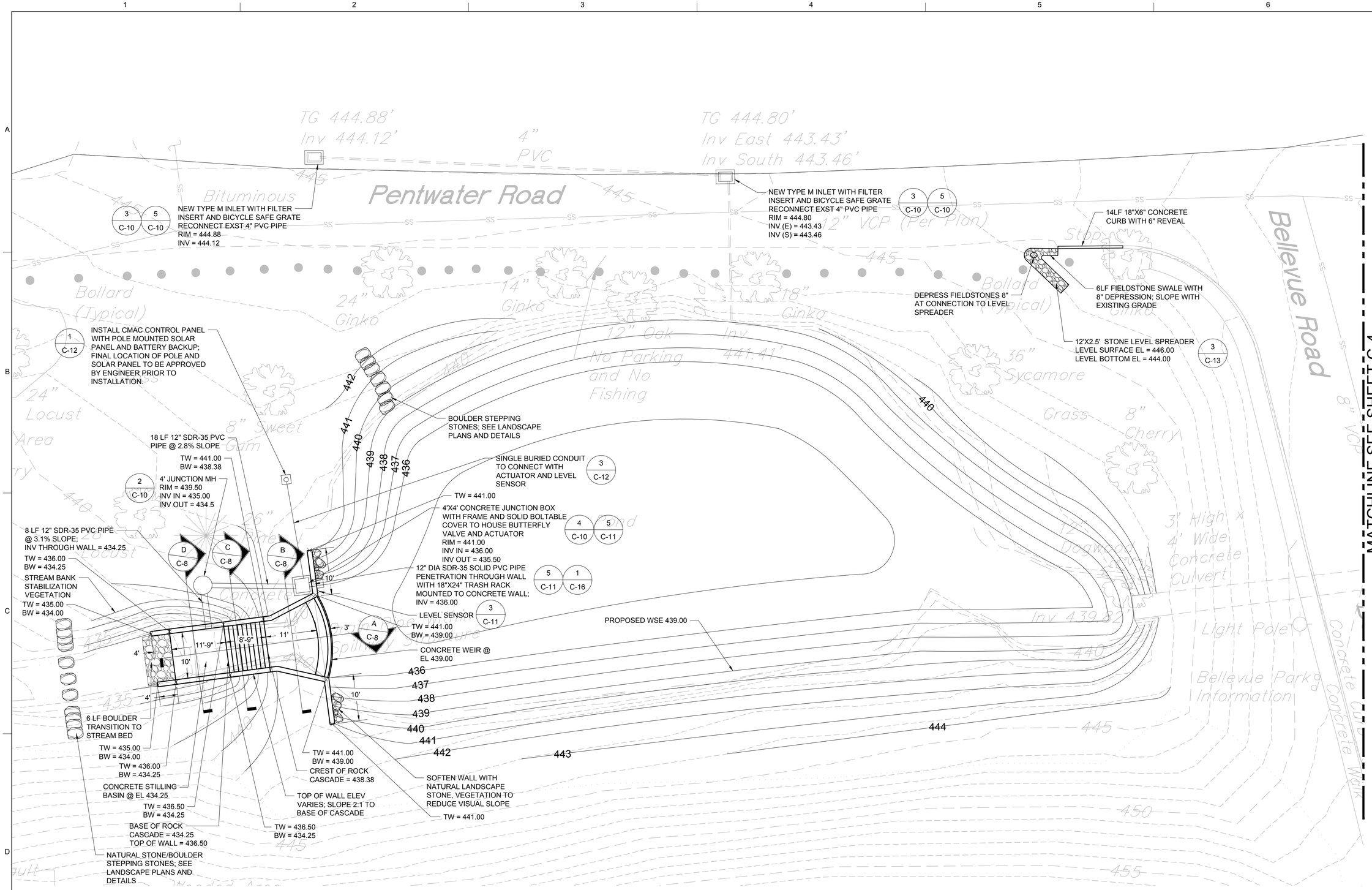

STORMWATER PLAN
1" = 10'

NO.	DATE	REVISION	BY	APVD
DSGN	S TURSI	DR T LUEHRS	CHK S BECK	APVD A POTTS

CAPITAL REGION WATER

BELLEVUE PARK POND RETROFIT
BELLEVUE PARK
CAPITAL REGION WATER (CRW)
HARRISBURG, PENNSYLVANIA

Jacobs

CIVIL
GRADING AND STORMWATER PLAN

1"=10'
VERIFY SCALE
BAR IS ONE INCH ON ORIGINAL DRAWING.
0 1"

DATE	OCTOBER 2021
PROJ	D3236600
DWG	C-7
SHEET	9 of 22

Land Studies

100% REVIEW SET - NOT FOR CONSTRUCTION

REUSE OF DOCUMENTS: THIS DOCUMENT, AND THE IDEAS AND DESIGNS INCORPORATED HEREIN, AS AN INSTRUMENT OF PROFESSIONAL SERVICE, IS THE PROPERTY OF CH2M HILL AND IS NOT TO BE USED, IN WHOLE OR IN PART, FOR ANY OTHER PROJECT WITHOUT THE WRITTEN AUTHORIZATION OF CH2M HILL.
© CH2M HILL 2015. ALL RIGHTS RESERVED.

FILENAME: C-7_D3236600.dwg PLOT DATE: 10/7/2021 PLOT TIME: 4:32:49 PM

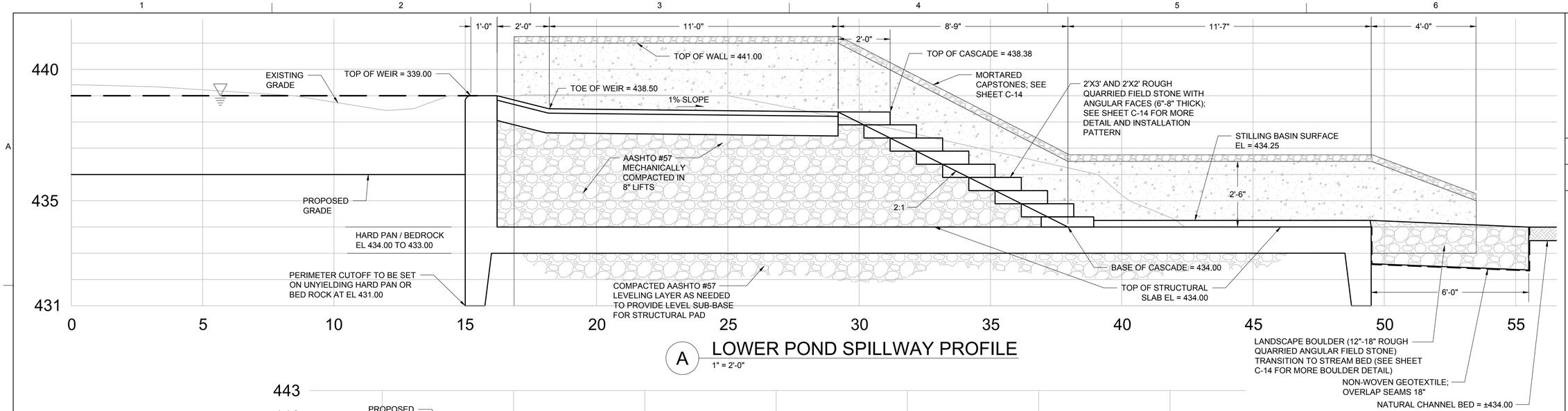

A LOWER POND SPILLWAY PROFILE
1" = 2'-0"

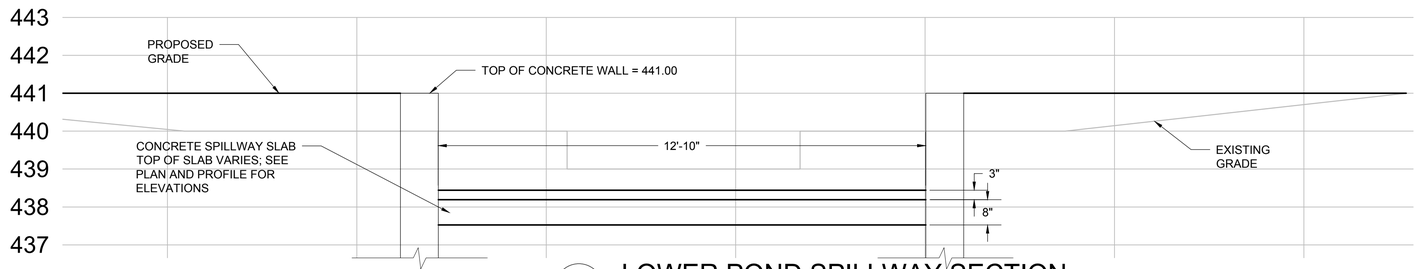

B LOWER POND SPILLWAY SECTION
1" = 2'-0"

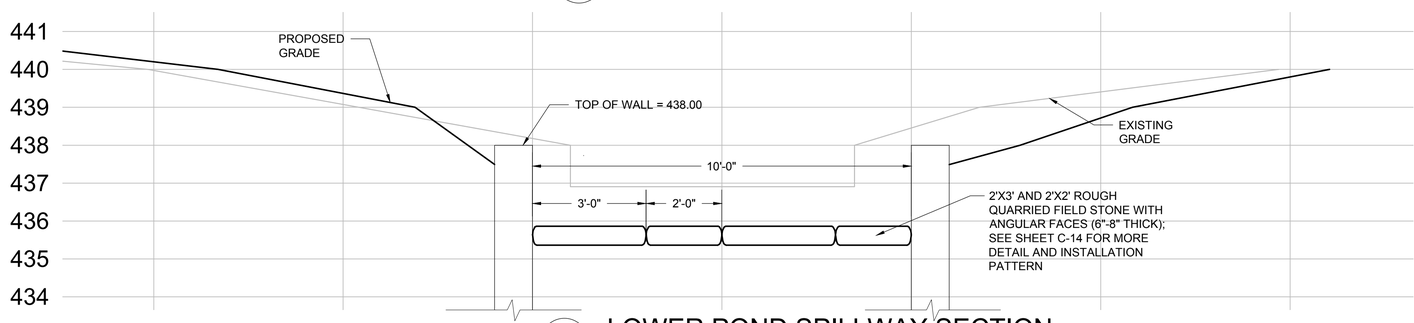

C LOWER POND SPILLWAY SECTION
1" = 2'-0"

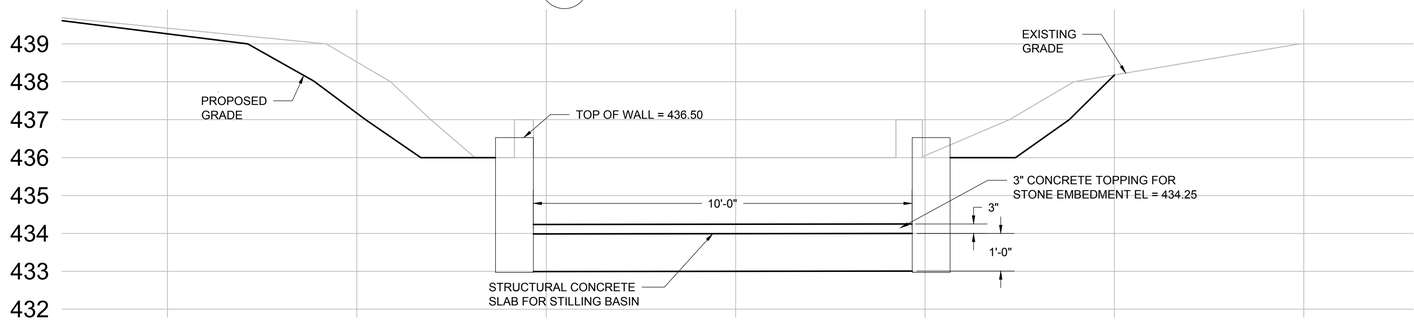

D LOWER POND SPILLWAY SECTION
1" = 2'-0"

NO.	DATE	DSGN	DR	CHK	BY
		S TURSI	B KLEIN	S BECK	A POTTS
				APVD	APVD

REVISION

©CH2M HILL 2015. ALL RIGHTS RESERVED.
THIS DOCUMENT, AND THE IDEAS AND DESIGNS INCORPORATED HEREIN, AS AN INSTRUMENT OF PROFESSIONAL SERVICE, IS THE PROPERTY OF CH2M HILL AND IS NOT TO BE USED, IN WHOLE OR IN PART, FOR ANY OTHER PROJECT WITHOUT THE WRITTEN AUTHORIZATION OF CH2M HILL.
REUSE OF DOCUMENTS:

100% REVIEW SET - NOT FOR CONSTRUCTION

CAPITAL REGION WATER

BELLEVUE PARK POND RETROFIT
BELLEVUE PARK
CAPITAL REGION WATER (CRW)
HARRISBURG, PENNSYLVANIA

Jacobs

CIVIL

SECTIONS AND PROFILES

Land Studies

1"=4'
VERIFY SCALE
BAR IS ONE INCH ON ORIGINAL DRAWING.
0 1"

DATE	OCTOBER 2021
PROJ	D3236600
DWG	C-8
SHEET	10 of 22

FILENAME: C-8_D3236600.dwg
PLOT DATE: 10/7/2021
PLOT TIME: 10:16:48 AM

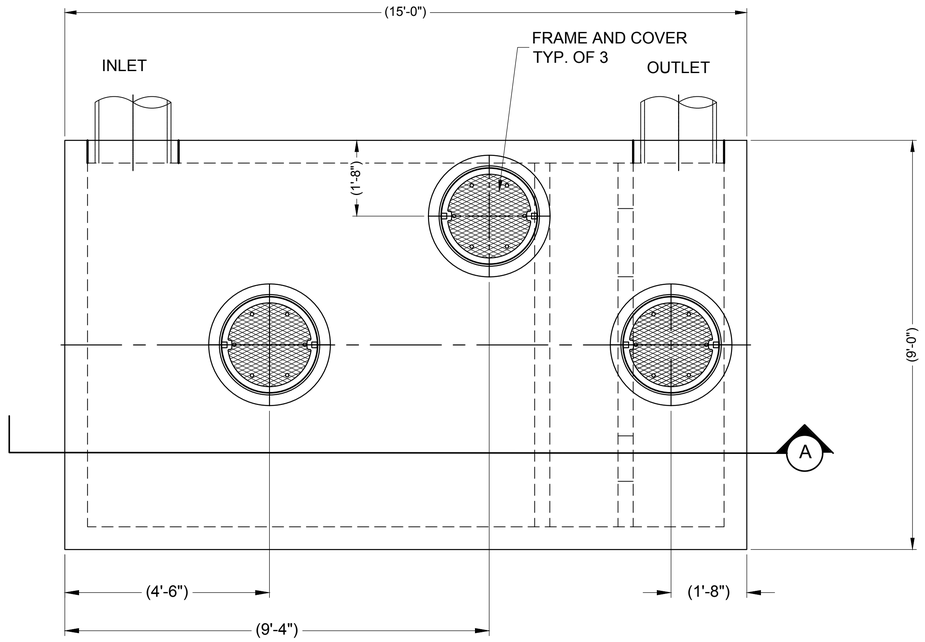

PLAN VIEW

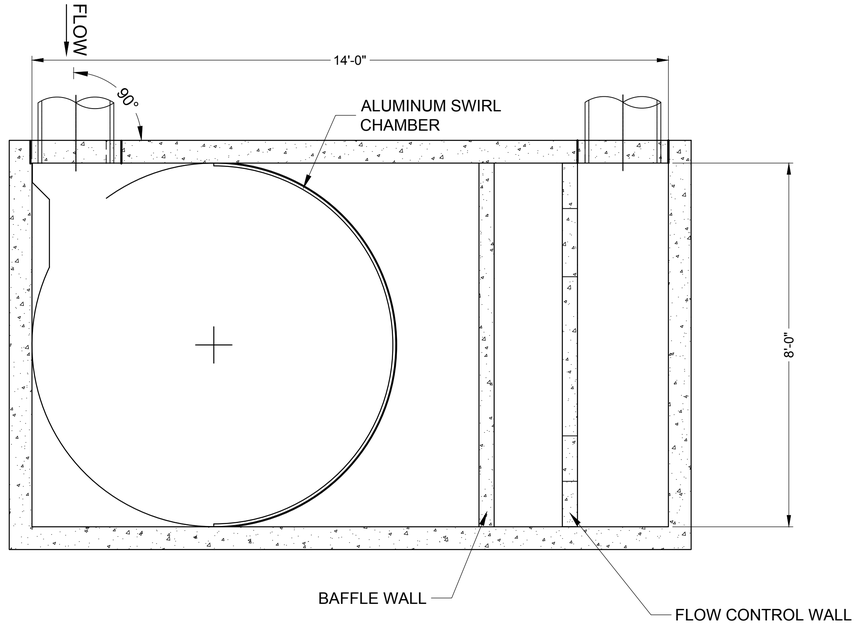

SECTION B-B

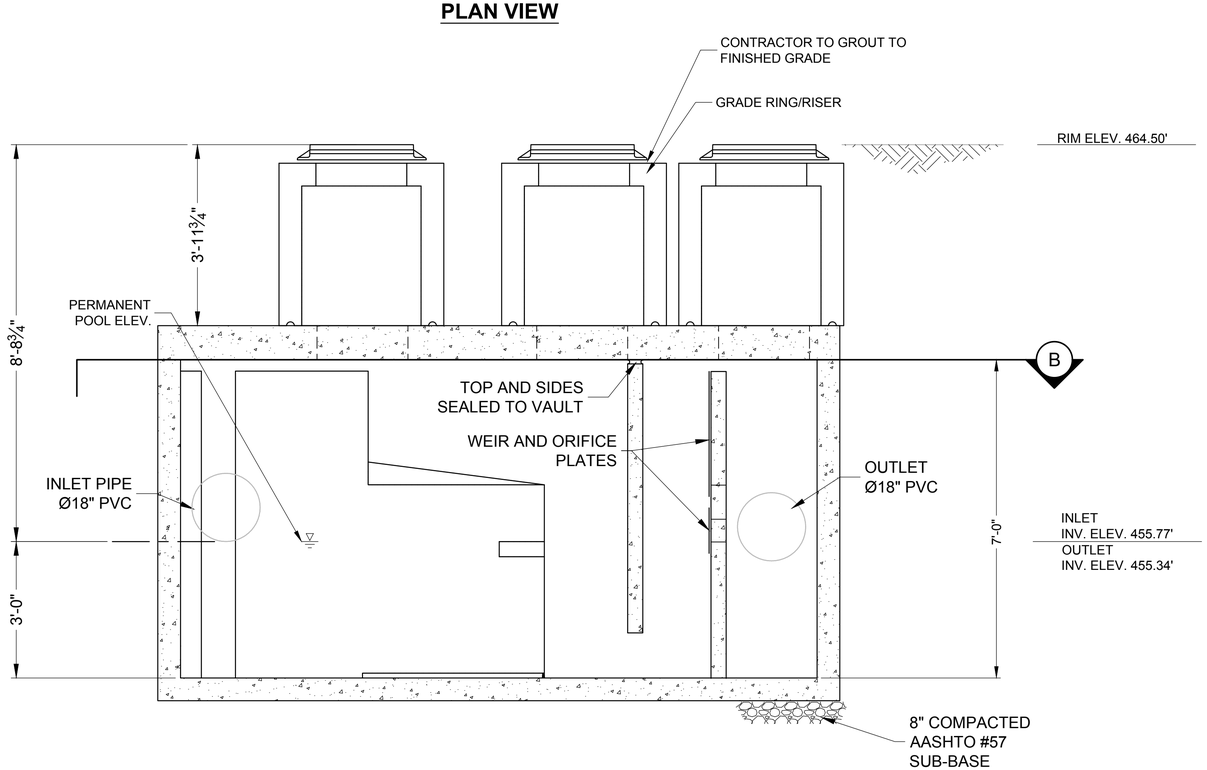

SECTION A-A

HYDRODYNAMIC SEPARATOR STORMWATER TREATMENT DEVICE

1 NTS

MATERIALS LIST

COUNT	DESCRIPTION	INSTALLED BY
1	ALUMINUM SWIRL CHAMBER	MANUFACTURER
1	ALUMINUM WEIR PLATE	MANUFACTURER
1	ALUMINUM ORIFICE PLATE	MANUFACTURER
1	SWIRL CHAMBER SEALANT	MANUFACTURER
1	SEALANT FOR JOINTS	CONTRACTOR
3	Ø24" x 4" FRAME AND COVER	CONTRACTOR

SITE DESIGN DATA

WATER QUALITY FLOW RATE	10 cfs
PEAK FLOW RATE	193 cfs
RETURN PERIOD OF PEAK FLOW	100 yrs

GENERAL NOTES

1. MANUFACTURER TO PROVIDE ALL MATERIALS UNLESS NOTED OTHERWISE.
2. DIMENSIONS MARKED WITH ( ) ARE REFERENCE DIMENSIONS. ACTUAL DIMENSIONS MAY VARY.
3. WATER QUALITY VAULT SHALL BE IN ACCORDANCE WITH ALL DESIGN DATA AND INFORMATION CONTAINED IN THIS DRAWING.
4. STRUCTURE SHALL MEET AASHTO HS20 AND CASTINGS SHALL MEET AASHTO M306 LOAD RATING, ASSUMING EARTH COVER OF 0' - 5', AND GROUNDWATER ELEVATION AT, OR BELOW, THE OUTLET PIPE INVERT ELEVATION.
5. WATER SURFACE ELEVATION IN THE SYSTEM IS EXPECTED TO BE AT OR BELOW TOP OF FLOW CONTROL WALL DURING THE DESIGN STORM.

INSTALLATION NOTES

1. ANY SUB-BASE, BACKFILL DEPTH, AND/OR ANTI-FLOTATION PROVISIONS ARE SITE-SPECIFIC DESIGN CONSIDERATIONS AND SHALL BE SPECIFIED BY ENGINEER OF RECORD.
2. CONTRACTOR TO PROVIDE EQUIPMENT WITH SUFFICIENT LIFTING AND REACH CAPACITY TO LIFT AND SET THE HYDRODYNAMIC SEPARATOR VAULT (LIFTING CLUTCHES PROVIDED).
3. CONTRACTOR TO INSTALL JOINT SEALANT BETWEEN ALL VAULT JOINTS AND ASSEMBLE VAULT.
4. CONTRACTOR TO PROVIDE, INSTALL, AND GROUT PIPES. MATCH PIPE INVERTS WITH ELEVATIONS SHOWN.
5. CONTRACTOR TO PROVIDE ANY EXTERNAL BYPASS VAULTS REQUIRED FOR OFFLINE LAYOUT (UNLESS OTHERWISE SPECIFIED.
6. CONTRACTOR TO PROVIDE AND INSTALL MANHOLE RISERS, GRADE RINGS OR BLOCK REQUIRED BETWEEN THE TOP OF THE HYDRODYNAMIC SEPARATOR SYSTEM AND THE BASE OF THE MANHOLE FRAMES. TOP SLAB OPENING DIAMETER MAY BE DIFFERENT FROM THOSE SHOWN.

NO.	DATE	DR	REVISION	CHK	BY	APVD
DSGN	S TURSI	T LUEHRS		S BECK	A POTTS	

©CH2M HILL 2015. ALL RIGHTS RESERVED.
REUSE OF DOCUMENTS: THIS DOCUMENT, AND THE IDEAS AND DESIGNS INCORPORATED HEREIN, AS AN INSTRUMENT OF PROFESSIONAL SERVICE, IS THE PROPERTY OF CH2M HILL AND IS NOT TO BE USED, IN WHOLE OR IN PART, FOR ANY OTHER PROJECT WITHOUT THE WRITTEN AUTHORIZATION OF CH2M HILL.

CAPITAL REGION | WATER

BELLEVUE PARK POND RETROFIT
BELLEVUE PARK
CAPITAL REGION WATER (CRW)
HARRISBURG, PENNSYLVANIA

Jacobs

CIVIL

DETAILS

AS NOTES
VERIFY SCALE
BAR IS ONE INCH ON ORIGINAL DRAWING.
0 1"

DATE	OCTOBER 2021
PROJ	D3236600
DWG	C-9
SHEET	11 of 22

Land Studies

100% REVIEW SET - NOT FOR CONSTRUCTION

FILENAME: C-9_D3236600.dwg PLOT DATE: 10/7/2021 PLOT TIME: 10:18:21 AM

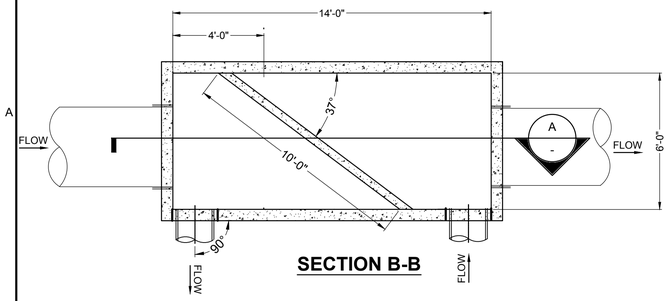

SECTION B-B

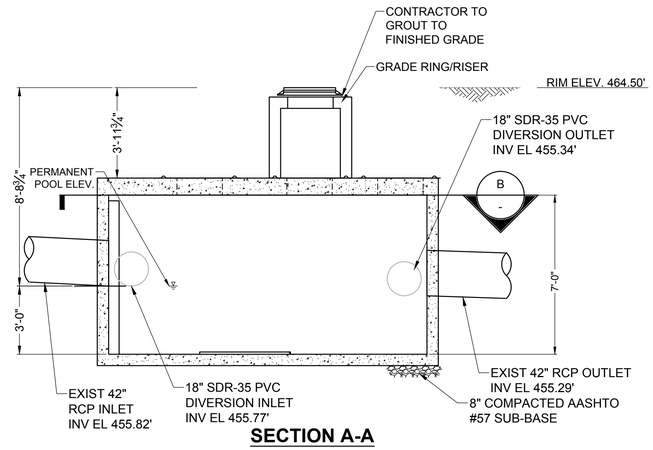

SECTION A-A

1 DIVERSION VAULT
NTS

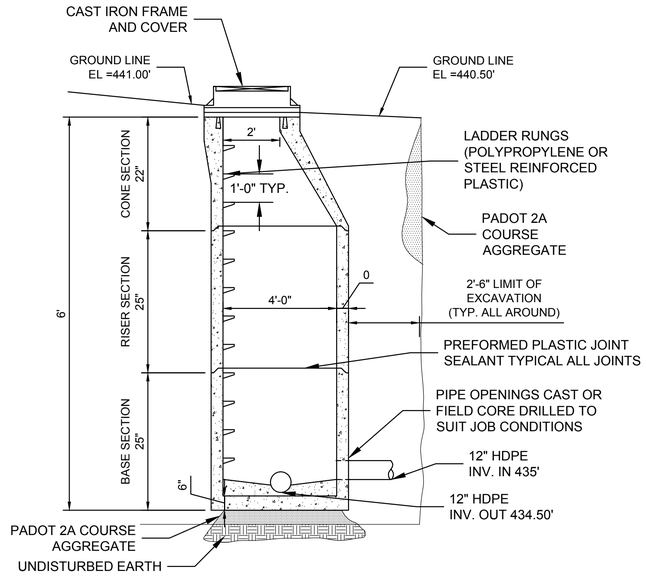

2 4' JUNCTION MANHOLE
NTS

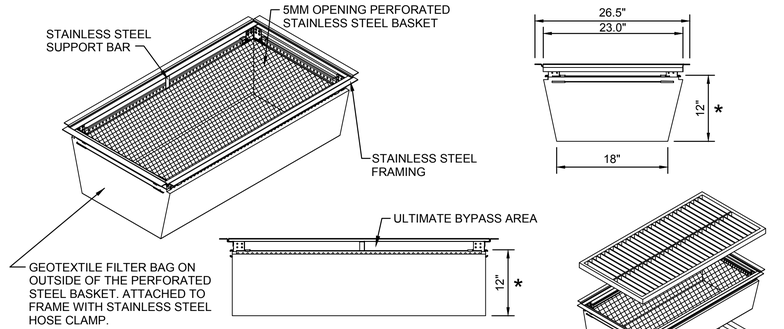

TO CHANGE OR CLEAN GEOTEXTILE BAG ON OUTSIDE OF BASKET:

1. REMOVE DEBRIS AND SEDIMENT FROM INSIDE STAINLESS STEEL BASKET.
2. REMOVE FILTER ASSEMBLY FROM INLET.
3. LOOSEN STAINLESS STEEL CLAMPING BAND AND REMOVE FILTER BAG.
4. CLEAN SEDIMENT OUT OF FILTER BAG AND CLEAN FABRIC WITH HIGH PRESSURE STREAM (REVERSE FLUSH).
5. REPLACE FILTER BAG ONTO FRAME BY ALIGNING BAND IN FRAMING'S SUPPORTS AND TIGHTENING STAINLESS STEEL HOSE CLAMP.

3 FLEX-STORM INLET FILTER INSERT
NTS

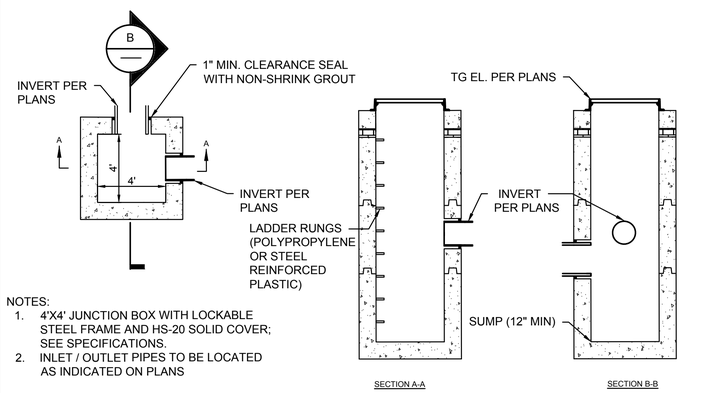

NOTES:
1. 4'X4' JUNCTION BOX WITH LOCKABLE STEEL FRAME AND HS-20 SOLID COVER; SEE SPECIFICATIONS.
2. INLET / OUTLET PIPES TO BE LOCATED AS INDICATED ON PLANS

4 4 x 4 JUNCTION BOX
NTS

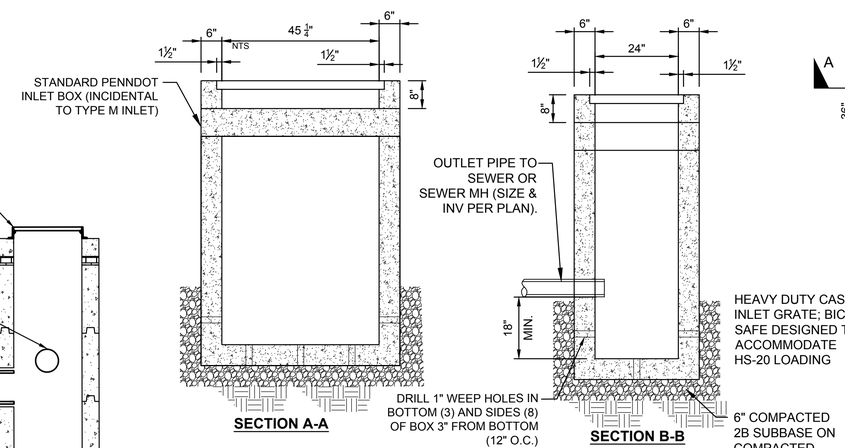

NOTES:
1. LOCATE WEEP HOLES A MINIMUM OF 6" FROM PIPE OPENINGS OR JOINTS.
2. ALL STEEL (FRAMES, GRATES. REINFORCEMENT BARS / MESH) SHALL BE DOCUMENTED MADE IN THE USA

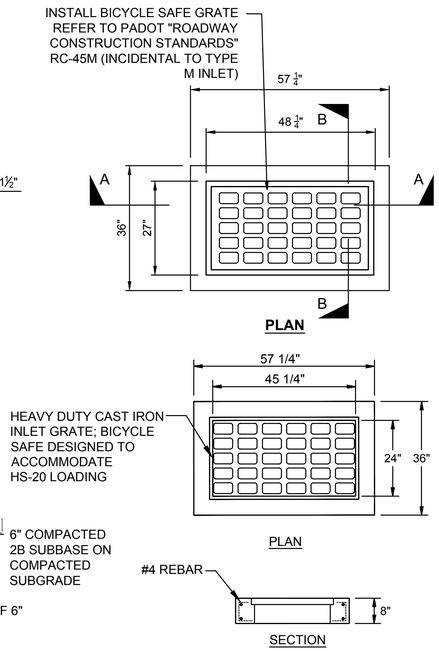

5 MODIFIED PENNDOT PRECAST INLET BOX WITH TYPE M TOP
NTS

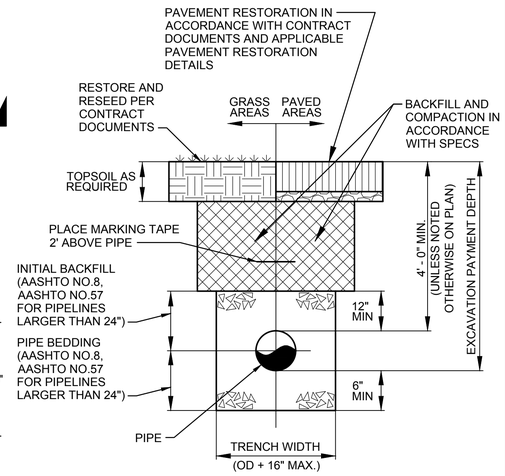

6 SOLID PIPE TRENCHING DETAIL
NTS

©CH2M HILL 2015. ALL RIGHTS RESERVED.
THIS DOCUMENT, AND THE IDEAS AND DESIGNS INCORPORATED HEREIN, AS AN INSTRUMENT OF PROFESSIONAL SERVICE, IS THE PROPERTY OF CH2M HILL AND IS NOT TO BE USED, IN WHOLE OR IN PART, FOR ANY OTHER PROJECT WITHOUT THE WRITTEN AUTHORIZATION OF CH2M HILL.
REUSE OF DOCUMENTS:

NO.	DSGN	DATE	REVISION	CHK	DR	BY	APVD
	S.TURSI		T.LUEHRS	S.BECK		A.POTTS	

BELLEVUE PARK POND RETROFIT
BELLEVUE PARK
CAPITAL REGION WATER (CRW)
HARRISBURG, PENNSYLVANIA

Jacobs

CIVIL

DETAILS

AS NOTED
VERIFY SCALE
BAR IS ONE INCH ON ORIGINAL DRAWING.
0 1"

DATE	OCTOBER 2021
PROJ	D3236600
DWG	C-10
SHEET	12of 22

100% REVIEW SET - NOT FOR CONSTRUCTION

Land Studies

FILENAME: C-10_D3236600.dwg PLOT DATE: PLOT TIME: 10:19:09 AM

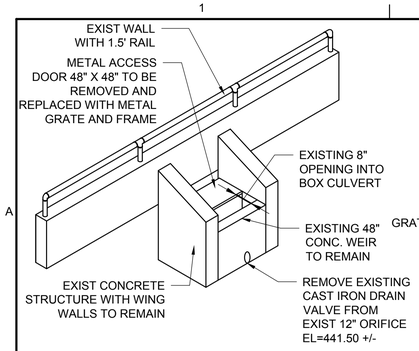

EXISTING CONDITION
ISOMETRIC VIEW

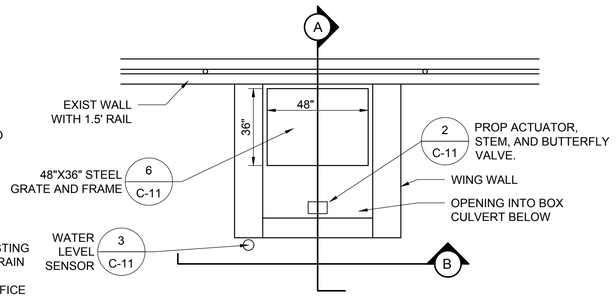

PROPOSED PLAN VIEW

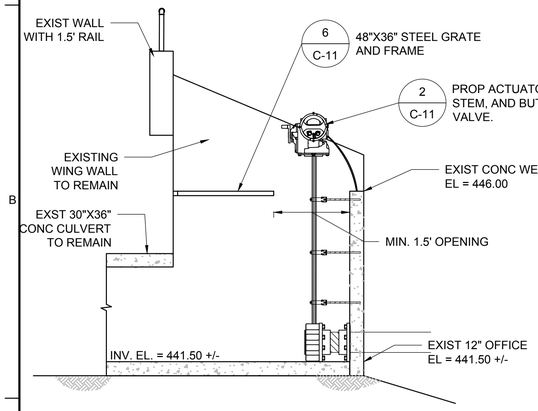

A PROPOSED SIDE VIEW

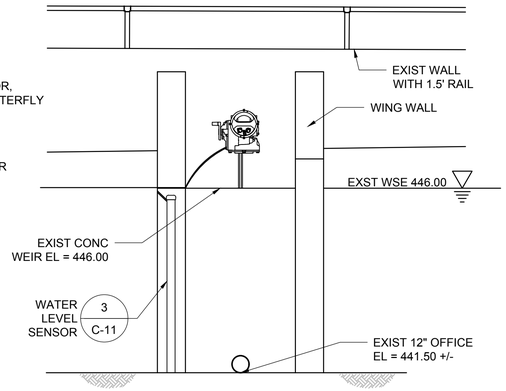

B PROPOSED FRONT VIEW

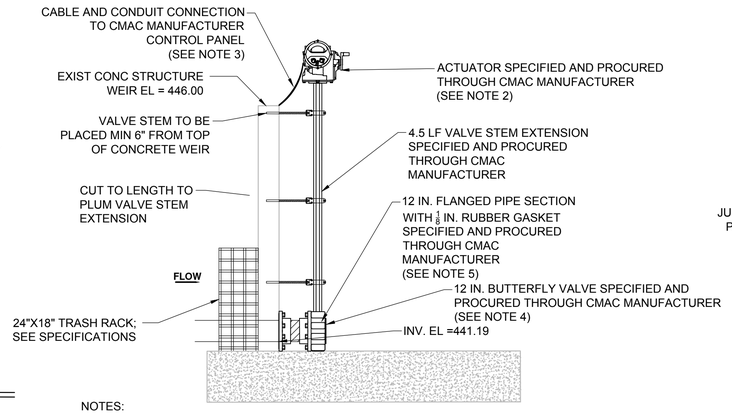

NOTES:

1. SPECIFIED EQUIPMENT TO BE PROCURED THROUGH CMAC MANUFACTURER.
   1.1. ACTUATOR, BUTTERFLY VALVE, AND VALVE STEM EXTENSION (DELIVERED PRE-ASSEMBLED ON PALLET)
   1.2. FLANGED PIPE SECTION AND RUBBER GASKET
   1.3. POLYWATER FOAM DUCT SEALANT (PROVIDED WITH CONTROL PANEL)

   ALL OTHER EQUIPMENT TO BE PROCURED BY INSTALLATION CONTRACTOR.
2. ACTUATOR TO BE ORIENTED WITH WHEEL FACING AWAY FROM WALL. VALVES SHALL REST ON ONE OF THE FOLLOWING: POURED CONCRETE PAD (4000 PSI), APPROVED CONCRETE BLOCKS, OR APPROVED STRUCTURE FIT TO BEAR 600LB LOAD.
3. IP68 CORD GRIP REQUIRED FOR CONNECTION BETWEEN WIRE AND CONTROL PANEL. ALL CONDUIT CONNECTIONS TO BE IP68 RATED AND SEALED WITH POLYWATER FOAM DUCT SEALANT. CONDUIT TO BE SIZED BY CONTRACTOR. ACTUATOR CONDUIT PORT IS 3/4 IN. INTERNAL THREADED, DOWNSIZE CONDUIT IF NEEDED. CONDUIT ALONG WALL TO BE SECURED WITH #304 SS CLIPS (3' SPACING MAXIMUM).
4. FLANGE TO VALVE CONNECTION: 12 X 7/8 - 9 UNC FLANGE CONNECTOR BOLTS SHALL BE TIGHTENED TO 238-354 LB-FT TORQUE. ALL HARDWARE TO BE #304 SS.
5. FLANGE TO WALL CONNECTION: BOLT CAVITIES TO BE CLEANED OF DEBRIS USING AUTO CLEANING DRILL BIT OR COMPRESSED AIR PRIOR TO ANCHORING. BOLT CAVITIES TO BE FILLED WITH INJECTABLE ADHESIVE ANCHOR (HILTI HIT SERIES EPOXY #2123401 OR EQUIVALENT). BOLTS TO BE EMBEDDED TO MINIMUM DEPTH SPECIFIED BY MANUFACTURER, 1 IN. CLEARANCE FROM REBAR.

2 ACTUATED VALVE DETAIL
NTS

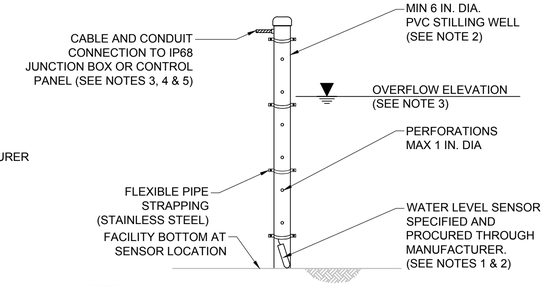

NOTES:

1. SPECIFIED EQUIPMENT TO BE PROCURED THROUGH CMAC MANUFACTURER.
   1.1. WATER LEVEL SENSOR
   1.2. POLYWATER FOAM DUCT SEALANT (SENT WITH CMAC CONTROL PANEL)

   ALL OTHER EQUIPMENT TO BE PROCURED BY INSTALLATION CONTRACTOR.
2. WATER LEVEL SENSOR TO REST WITHIN PVC STILLING WELL. SENSOR TO REST AT BOTTOM OF FACILITY OR AT SPECIFIED MINIMUM ELEVATION.
3. JUNCTION BOX REQUIRED IF CABLE LENGTH EXCEEDS 100 FT. JUNCTION BOX LOCATION TO BE SPECIFIED BY CMAC. BOTTOM OF JUNCTION BOX TO BE MOUNTED AT LEAST 4 IN. ABOVE OVERFLOW ELEVATION.
4. PENETRATIONS INTO ALL EQUIPMENT AND CONNECTIONS WITHIN JUNCTION BOXES SHALL BE IP68 RATED AND SEALED WITH POLYWATER FOAM DUCT SEALANT. SEE ELECTRICAL DIAGRAM FOR CABLE AND CONDUIT SPECIFICATION.
5. CONDUIT SECURED ON WALL WITH STAINLESS STEEL CLIPS (3' MAX SPACING). PVC STILLING WELL TO BE SECURED WITH STAINLESS STEEL PIPE STRAPPING (24 IN. MAX SPACING).
6. PRESSURE REFERENCE DEVICE TO BE LOCATED IN CONTROL PANEL. DO NOT SPLICE WATER LEVEL SENSOR CABLE.
7. MINIMUM 1 FOOT SPARE CABLING TO BE NEATLY COILED IN CONTROL PANEL FOR FUTURE MAINTENANCE OR SYSTEM MODIFICATIONS.

3 WATER LEVEL SENSOR DETAIL
NTS

1 UPPER POND OUTLET STRUCTURE MODIFICATION DETAIL
NTS

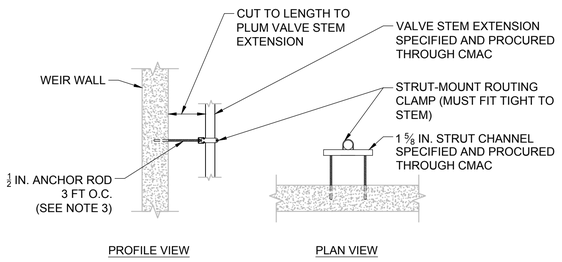

NOTES:

1. SPECIFIED EQUIPMENT TO BE PROCURED THROUGH CMAC MANUFACTURER.
   1.1. VALVE STEM EXTENSION (DELIVERED WITH VALVE)
   1.2. 12" x 1 5/8 IN. STRUT CHANNEL
   1.3. 18" x 1/2 IN. ANCHOR RODS (2 PER STRUT)
   1.4. STRUT-MOUNT ROUTING CLAMPS (2 PER STRUT)
2. ALL BRACKET MATERIALS MUST BE #304 STAINLESS STEEL.
3. MINIMUM SPACING: 1 VALVE STEM MOUNT FOR STEM LENGTH BELOW 3 FEET. ADD VALVE STEM MOUNTS PER ADDITIONAL 3 FEET OF STEM LENGTH.
4. 1/2 IN. ANCHOR ROD TO BE SET USING INJECTABLE ADHESIVE ANCHOR WITH AUTO CLEANING DRILL BIT OR CLEAN HOLE THOROUGHLY WITH COMPRESSED AIR. USE QUIKRETE HIGH STRENGTH ANCHORING EPOXY (PRODUCT #8620-31) OR EQUIVALENT. ROD SET IN CONCRETE MIN 3 IN..

4 VALVE STEM MOUNT DETAIL
NTS

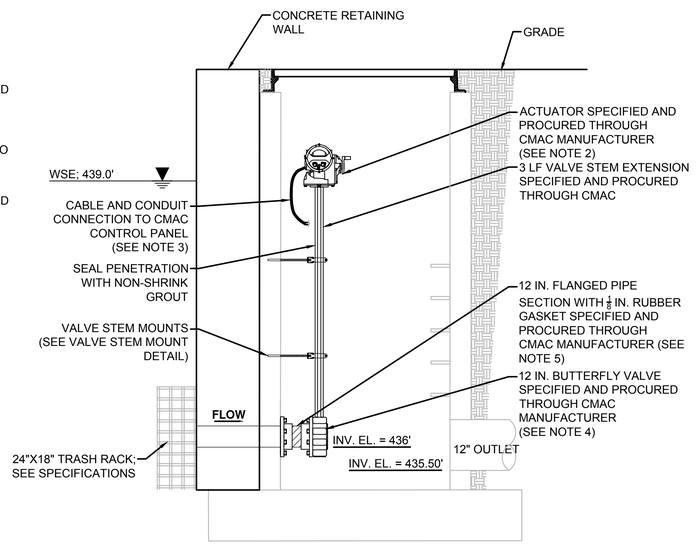

LOWER POND ACTUATED VALVE WITHIN JUNCTION BOX
5 NTS

NOTES:

1. SPECIFIED EQUIPMENT TO BE PROCURED THROUGH CMAC MANUFACTURER:
   1.1. ACTUATOR, BUTTERFLY VALVE, AND VALVE STEM EXTENSION (DELIVERED PRE-ASSEMBLED ON PALLET)
   1.2. FLANGED PIPE SECTION AND RUBBER GASKET
   1.3. POLYWATER FOAM DUCT SEALANT (SENT WITH CONTROL PANEL)

   ALL OTHER EQUIPMENT TO BE PROCURED BY INSTALLATION CONTRACTOR.
2. ACTUATOR TO BE ORIENTED WITH WHEEL FACING AWAY FROM WALL. VALVES SHALL REST ON ONE OF THE FOLLOWING: POURED CONCRETE PAD (4000 PSI), APPROVED CONCRETE BLOCKS, OR APPROVED STRUCTURE FIT TO BEAR 600LB LOAD.
3. IP68 CORD GRIP REQUIRED FOR CONNECTION BETWEEN WIRE AND CONTROL PANEL. ALL CONDUIT CONNECTIONS TO BE IP68 RATED AND SEALED WITH POLYWATER FOAM DUCT SEALANT. CONDUIT TO BE SIZED BY CONTRACTOR. ACTUATOR CONDUIT PORT IS 3/4 IN. INTERNAL THREADED, DOWNSIZE CONDUIT IF NEEDED. CONDUIT ALONG WALL TO BE SECURED WITH #304 SS CLIPS (3' SPACING MAXIMUM).
4. FLANGE TO VALVE CONNECTION: 12 X 7/8 - 9 UNC FLANGE CONNECTOR BOLTS SHALL BE TIGHTENED TO 238-354 LB-FT TORQUE. ALL HARDWARE TO BE #304 SS.
5. FLANGE TO WALL CONNECTION: BOLT CAVITIES TO BE CLEANED OF DEBRIS USING AUTO CLEANING DRILL BIT OR COMPRESSED AIR PRIOR TO ANCHORING. BOLT CAVITIES TO BE FILLED WITH INJECTABLE ADHESIVE ANCHOR (HILTI HIT SERIES EPOXY #2123401 OR EQUIVALENT). BOLTS TO BE EMBEDDED TO MINIMUM DEPTH SPECIFIED BY MANUFACTURER, 1 IN. CLEARANCE FROM REBAR.
6. TRASH RACK SPECIFIED BY THE ENGINEER OF RECORD (OR OTHERS) TO BE PROCURED BY CONTRACTOR. TRASH RACKS ARE REQUIRED PRIOR TO OPERATION OF THE ACTUATED VALVE AND SOFTWARE.

TO BE ADDED

6 METAL GRATE
NTS

NO.	DATE	REVISION	BY	APVD
DSGN	DR	CHK	T.LUEHRS	A.BOLTS
S.TURSI			S.BECK	APVD

©CH2M HILL 2015. ALL RIGHTS RESERVED.
THIS DOCUMENT, AND THE IDEAS AND DESIGNS INCORPORATED HEREIN, AS AN INSTRUMENT OF PROFESSIONAL SERVICE, IS THE PROPERTY OF CH2M HILL AND IS NOT TO BE USED, IN WHOLE OR IN PART, FOR ANY OTHER PROJECT WITHOUT THE WRITTEN AUTHORIZATION OF CH2M HILL.
REUSE OF DOCUMENTS:

100% REVIEW SET - NOT FOR CONSTRUCTION

CAPITAL REGION | WATER

BELLEVUE PARK POND RETROFIT
BELLEVUE PARK
CAPITAL REGION WATER (CRW)
HARRISBURG, PENNSYLVANIA

Jacobs

CIVIL

DETAILS

AS NOTED
VERIFY SCALE
BAR IS ONE INCH ON ORIGINAL DRAWING.
0 1"

DATE	OCTOBER 2021
PROJ	D3236600
DWG	C-11
SHEET	13of 22

Land Studies

FILENAME: C-11 D3236600.dwg PLOT DATE: 10/7/2021 PLOT TIME: 10:22:56 AM

1 2 3 4 5 6

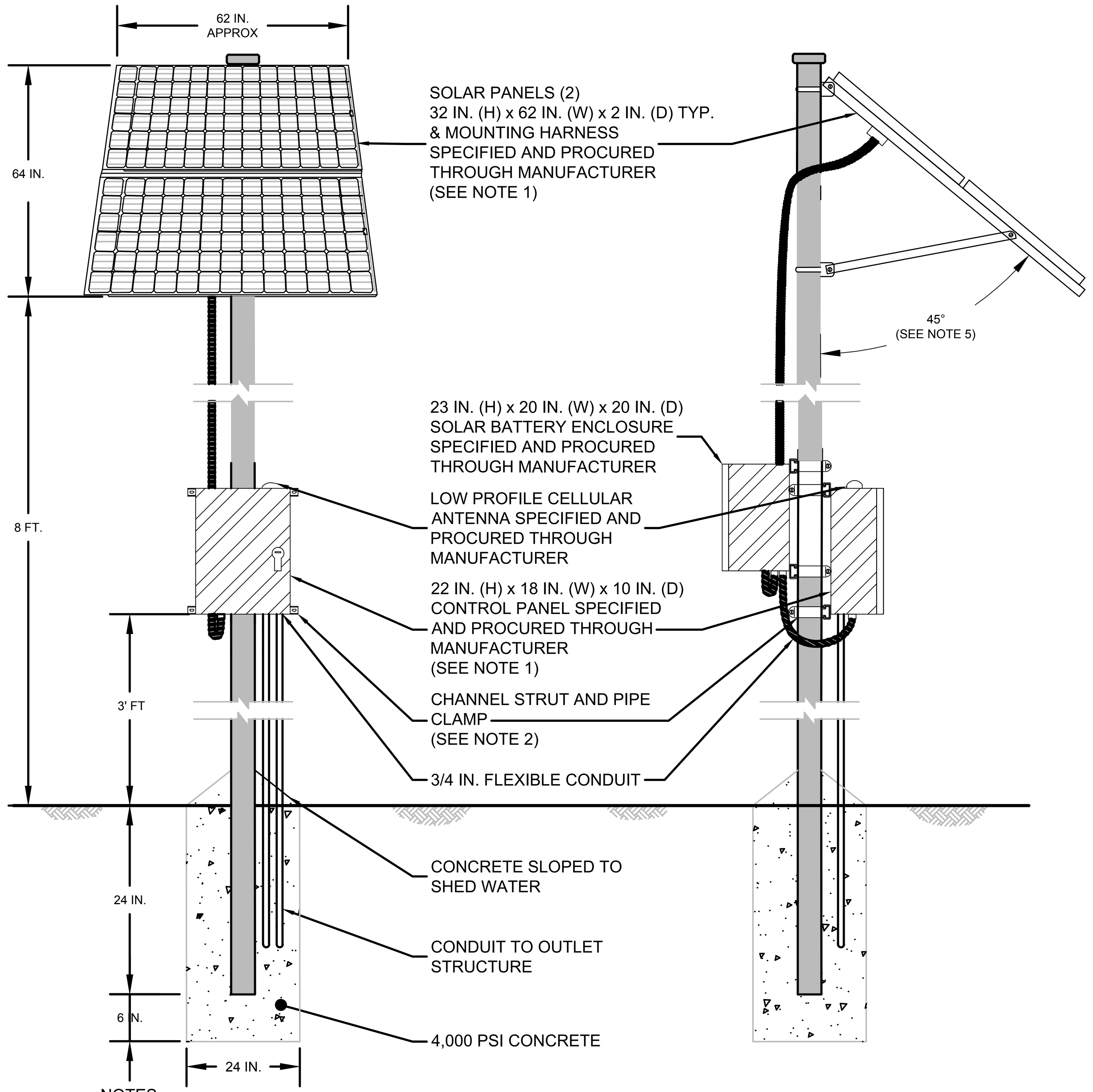

NOTES:

1. SPECIFIED EQUIPMENT TO BE PROCURED THROUGH CMAC MANUFACTURER.
   - 1.1. 22 IN. X 18 IN. X 10 IN. NEMA 4X CABINET WITH CELLULAR ANTENNA AND CHANNEL STRUT MOUNTING CLIPS
   - 1.2. SOLAR PANEL KIT AND MOUNTING HARNESS
   - 1.3. POLYWATER FOAM DUCT SEALANT (SENT WITH CONTROL PANEL)
2. GALVANIZED STEEL CHANNEL STRUT TO BE BOLTED TO SUPPORT POLE USING GALVANIZED STEEL CHANNEL STRUT PIPE CLAMPS. CONTROL PANEL TO BE BOLTED TO CHANNEL STRUT (CHANNEL STRUT MOUNTING CLIP SHIPPED WITH CONTROL PANEL). PANEL TO BE MOUNTED MINIMUM 3 FT. FROM GROUND.
3. ALL CONDUIT PENETRATIONS ARE TO BE IP68 RATED AND SEALED WITH POLYWATER FOAM DUCT SEALANT. SEE ELECTRICAL DIAGRAM FOR CABLE AND CONDUIT SPECIFICATION.
4. ALL EQUIPMENT TO BE GROUNDED TO CONTROL PANEL GROUNDING LUGS. OPTI CONTROL PANEL TO BE GROUNDED TO A GROUNDING ROD, GALVANIZED STEEL POLE, OR CONCRETE-ENCASED GROUNDING ELECTRODE. (SEE ELECTRICAL DIAGRAM AND GROUNDING ROD DETAIL).
5. SOLAR PANELS TO BE MOUNTED FACING SOUTH AT 45° FROM THE MOUNTING POLE.

1 CMAC CONTROL PANEL SOLAR POWER (POLE MOUNTED)

NTS

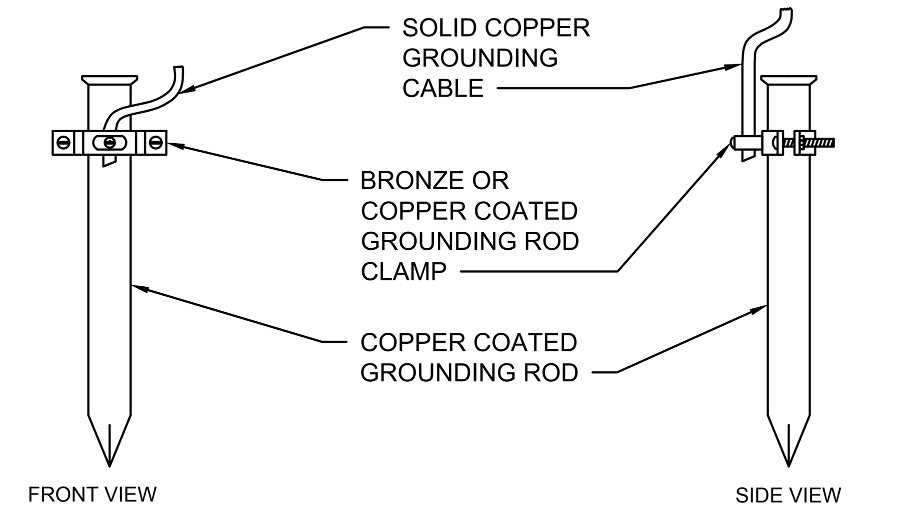

NOTES:

1. GROUNDING ROD TO BE MINIMUM COPPER COATED, 8 FT LENGTH, $\frac{1}{2}$ DIAMETER
2. GROUNDING ROD CLAMP TO BE BRONZE OR COPPER COATED AND SIZED FOR GROUNDING CABLE
3. GROUNDING CONDUCTOR TO BE SOLID COPPER, 12 AWG TO 2 AWG, AND SECURELY LANDED AT GROUNDING ROD CLAMP AND CONTROL PANEL GROUNDING LUG
4. ALL PENETRATIONS IN CONTROL PANEL TO BE 1P68 RATED
5. MAXIMUM 6 IN OF GROUNDING ROD EXPOSED ABOVE GROUND

2 GROUNDING RODS

NTS

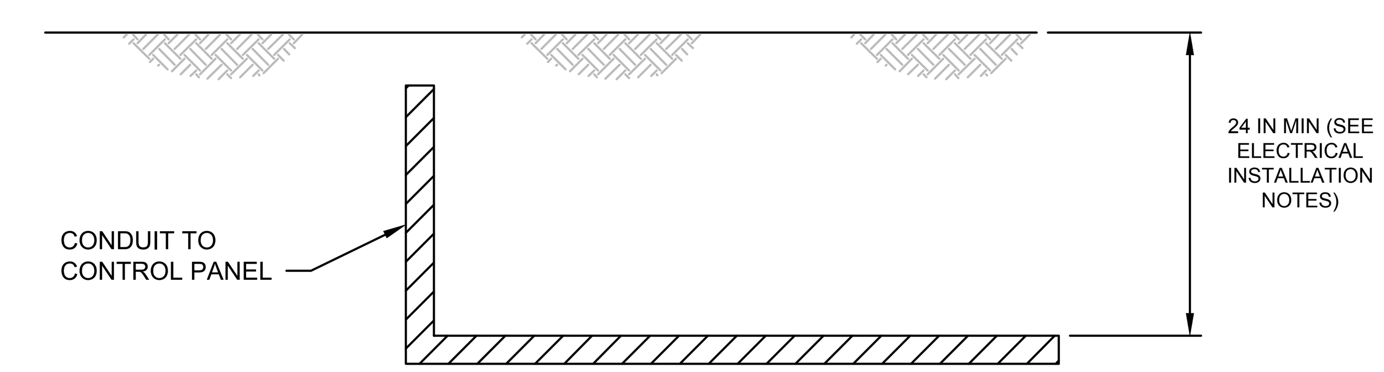

NOTES:

1. ALL BURIED CONDUIT SHALL BE SPECIFIED ACCORDING TO ELECTRICAL ISTALLATION.
2. ALL CONDUIT PENETRATIONS ARE TO BE IP68 RATED
3. REPLACED SOIL SHALL BE COMPACTED TO AT LEAST 95% OF ASTM D698, BACKFILL SHALL BE FREE OF ROCKS LARGER THAN 8 INCHES IN DIAMETER.

3 CONDUIT BURIAL DETAIL

NTS

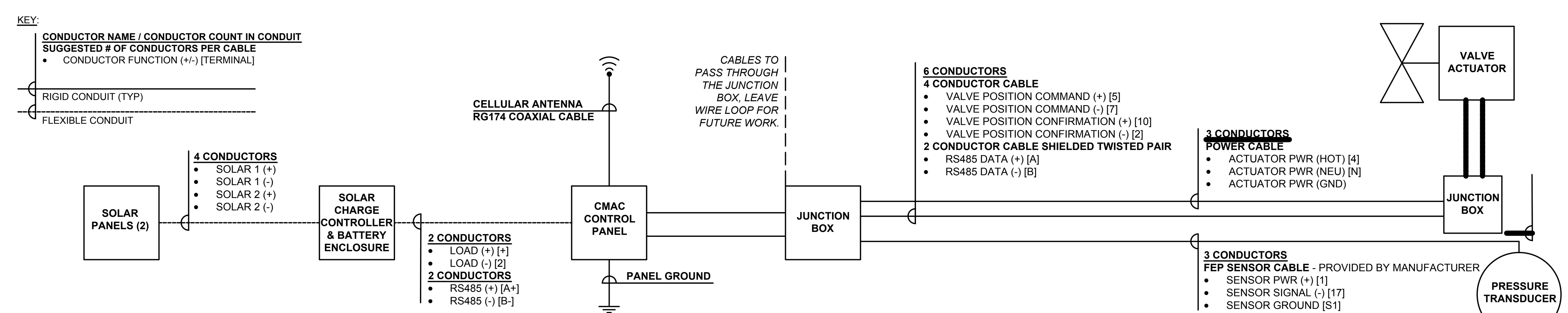

24VDC WIRING GUIDE - V 2.0.4				
CONTROL PANEL TERMINAL	EXTERNAL DEVICE TERMINAL	WIRE COLOR/CABLE LOCATION	PURPOSE	PROCURED BY
SOLAR LOAD CONNECTION				
+	L+	RED (+), LOAD WIRE FROM CHARGE CONTROLLER	SOLAR BATTERY POSITIVE (+) POWER	MANUFACTURER
2	L-	BLACK (-), LOAD WIRE FROM CHARGE CONTROLLER	SOLAR BATTERY NEGATIVE (-) POWER	MANUFACTURER
A+	A	2 CONDUCTOR CABLE, TWISTED PAIR	SOLAR CHARGE CONTROLLER DATA (+)	INSTALLER
B-	B	2 CONDUCTOR CABLE, TWISTED PAIR	SOLAR CHARGE CONTROLLER DATA (-)	INSTALLER
ACTUATOR - ROTORK IQT & IQD SERIES (IQT: 303M2000, IQD: 143M2000)				
4	1	3 CONDUCTOR CABLE	ACTUATOR POWER (+)	INSTALLER
2	2	3 CONDUCTOR CABLE	ACTUATOR POWER (-)	INSTALLER
GROUND LUG	GND SYMBOL	3 CONDUCTOR CABLE	ACTUATOR GROUND	INSTALLER
5	16	4 CONDUCTOR CABLE	VALVE POSITION COMMAND SIGNAL (+)	INSTALLER
7	17	4 CONDUCTOR CABLE	VALVE POSITION COMMAND SIGNAL (-)	INSTALLER
10	15	4 CONDUCTOR CABLE	VALVE POSITION CONFIRMATION SIGNAL (+)	INSTALLER
2	14	4 CONDUCTOR CABLE	VALVE POSITION CONFIRMATION SIGNAL (-)	INSTALLER
A +	27	2 CONDUCTOR CABLE, SHIELDED TWISTED PAIR	RS485 DATA (+)	INSTALLER
B -	28	2 CONDUCTOR CABLE, SHIELDED TWISTED PAIR	RS485 DATA (-)	INSTALLER
PRESSURE TRANSDUCER (4-20mA) - PMC VL2000 SERIES				
1	-------------------	RED (+), PMC	PRESSURE TRANSDUCER, POWER	MANUFACTURER
17	-------------------	BLACK (-), PMC	PRESSURE TRANSDUCER, SIGNAL	MANUFACTURER
S1	-------------------	GREEN (GND), PMC	PRESSURE TRANSDUCER, GROUNDING	MANUFACTURER

MINIMUM CONDUIT SIZE SPECIFICATIONS	
NO. CONDUCTORS	MIN. CONDUIT SIZE (IN)
2	½
3 - 6	¾
7 - 9	1
10 - 12	1-¼

ELECTRICAL INSTALLATION NOTES

1. DETERMINE IF THERE ARE UNDERGROUND UTILITIES IN THE WORK AREA PRIOR TO EXCAVATION, BY CALLING DIG SAFE AT LEAST 48 HOURS PRIOR TO STARTING WORK. CONTRACTOR SHALL BE LIABLE FOR ANY DAMAGE TO UNDERGROUND UTILITIES CAUSED BY TRENCHING OR EXCAVATION.
2. INSTALLATION OF THE CONTROL PANEL AND ASSOCIATED COMPONENTS (E.G., CABLING, CONDUIT, SENSORS) MUST BE PERFORMED BY A LICENSED ELECTRICIAN. ELECTRICIAN SHALL BE RESPONSIBLE FOR ENSURING THAT THE CONTROL PANEL AND ASSOCIATED COMPONENTS ARE PROPERLY CONNECTED TO THE SOLAR POWER SYSTEM AND THAT CONDUIT AND CABLING IS SIZED AND INSTALLED PER THE NEC.
3. ALL CONDUCTORS SHALL BE IDENTIFIED AT EACH END (LABELED OR COLOR CODED) AND THE IDENTIFIED CONDUCTORS DOCUMENTED IN THE SITE LAYOUT MAP.
4. PENETRATIONS INTO CONTROL PANEL, AND JUNCTION BOXES MUST BE IP68 RATED (NO WATER SHALL PENETRATE ANY SEALS). SUBSURFACE TERMINATIONS SHALL BE SEALED WITH POLYWATER CLOSED-CELL FOAM DUCT SEALANT (PROCURED THROUGH CMAC WITH CONTROL PANEL).
5. ALL CABLE SPLICES MUST BE MADE WITHIN JUNCTION BOXES AND SHALL BE LIQUID TIGHT, SOLDERED, AND COVERED WITH DUAL WALL HEAT SHRINK. WIRE NUTS MAY NOT BE USED FOR ANY CONNECTIONS.
6. REFERENCE THE CMAC MANUFACTURER PROVIDED TABLE FOR THE CORRECT CONDUCTOR GAUGE FOR ACTUATOR POWER CONNECTIONS. ALL OTHER CONDUCTORS MUST BE AT LEAST 16AWG.
7. ALL BURIED CONDUIT RUNS SHALL BE RIGID SCH 40 PVC CONDUIT. ALL EXPOSED CONDUIT SHALL BE RIGID SCH 40 PVC OR FLEXIBLE TYPE-UA PVC. BURIED RIGID SCHEDULE 40 CONDUIT SHALL BE INSTALLED WITH A MINIMUM COVER OF AT LEAST 18" IN ACCORDANCE WITH TABLE 300.5 OF THE NEC.
8. CONDUIT SHALL BE SIZED PER THE NEC TO HAVE AN ADEQUATE CROSS-SECTIONAL AREA FOR INSTALLED CABLES. REFERENCE CMAC MANUFACTURER PROVIDED TABLE FOR MINIMUM CONDUIT SIZE. ACTUATOR HAS ¾" PORTS FOR CONDUIT, USE REDUCING FITTING IF NEEDED.
9. LEAVE A MINIMUM OF 1 FOOT SPARE CABLING NEATLY COILED IN CONTROL PANEL FOR FUTURE MAINTENANCE OR SYSTEM MODIFICATIONS.
10. LEAVE A MINIMUM 3 FEET LOOP OF FLEXIBLE CONDUIT IN OUTLET STRUCTURE FOR EASE OF FUTURE MAINTENANCE. FLEXIBLE CONDUIT SHALL RUN FROM ACTUATOR TO JUNCTION BOX LOCATED IN OUTLET STRUCTURE. RIGID CONDUIT SHALL RUN FROM JUNCTION BOX TO CMAC CONTROL PANEL.
11. ALL SUBMERGED/SATURATED METAL HARDWARE SHALL BE STAINLESS STEEL. GALVANIZED STEEL MAY BE USED ABOVEGROUND OR IN DRY LOCATIONS.
12. PRESSURE REFERENCE DEVICE (COMPONENT OF LEVEL SENSOR AT CABLE TERMINATION) TO BE LOCATED IN JUNCTION BOX.
13. CONNECT ALL EQUIPMENT GROUNDING CONDUCTORS TO THE CMAC CONTROL PANEL GROUNDING LUGS. GROUND THE CMAC CONTROL PANEL TO A GROUNDING ROD, GALVANIZED STEEL POLE, OR A CONCRETE-ENCASED GROUNDING ELECTRODE.
14. AFTER INSTALLATION, COMPLETE CONTRACTOR INSTALLATION CHECKLIST PROVIDED BY THE CMAC MANUFACTURER AND PROVIDE PHOTOS OF ALL INSTALLED EQUIPMENT. SEND SIGNED CHECKLIST AND PHOTOS TO CMAC.
15. MANUFACTURER WILL INSPECT INSTALLED COMPONENTS PRIOR TO ENERGIZING THE SYSTEM. FINAL COMPLETION SHALL BE REACHED WHEN: (1) CONSTRUCTION OF THE SYSTEM PER THE PLANS IS COMPLETE; (2) THE ENGINEER OF RECORD HAS COMPLETED FINAL INSPECTION OF WORK AND ALL NOTED DEFICIENCIES HAVE BEEN CORRECTED TO THE SATISFACTION OF THE ENGINEER OF RECORD, CMAC, AND THE SITE OWNER; AND (3) AN AS-BUILT SKETCH HAS BEEN PROVIDED OF ALL INSTALLED COMPONENTS IF FINAL INSTALL LOCATIONS HAVE VARIED FROM PLANSET.

4 CMAC ELECTRICAL DIAGRAM AND NOTES

NTS

Land studies

NO.	DATE	REVISION	BY	APVD

DSGN S TURSI | DR T UEHRS | CHK S BECK | APVD A POTTS

BELLEVUE PARK POND RETROFIT
BELLEVUE PARK
CAPITAL REGION WATER (CRW)
HARRISBURG, PENNSYLVANIA

Jacobs

CIVIL

DETAILS

AS NOTED
VERIFY SCALE
BAR IS ONE INCH ON ORIGINAL DRAWING.
0 1"

DATE	OCTOBER 2021
PROJ	D3236600
DWG	C-12
SHEET	14of 22

REUSE OF DOCUMENTS: THIS DOCUMENT, AND THE IDEAS AND DESIGNS INCORPORATED HEREIN, AS AN INSTRUMENT OF PROFESSIONAL SERVICE, IS THE PROPERTY OF CH2M HILL AND IS NOT TO BE USED, IN WHOLE OR IN PART, FOR ANY OTHER PROJECT WITHOUT THE WRITTEN AUTHORIZATION OF CH2M HILL.
©CH2M HILL 2015. ALL RIGHTS RESERVED.

100% REVIEW SET - NOT FOR CONSTRUCTION

WEARING COURSE	DEPTH	BASE COURSE	DEPTH
SUPERPAVE 12.5 MM PG 64-22, 3.0<10.0 MILLION ESAL's	2"	SUPERPAVE 25 MM PG 64-22, 3.0<10.0 MILLION ESAL's	4-1/2"

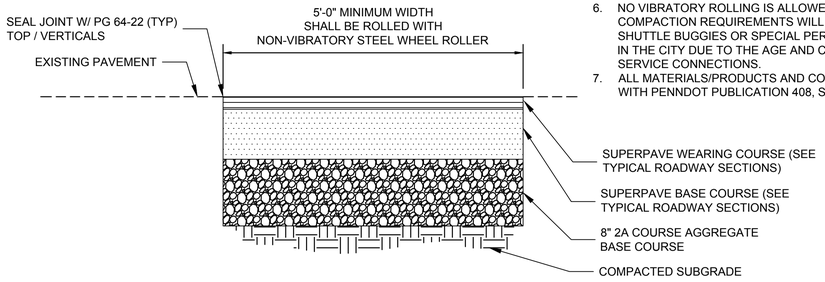

1 BASE ROADWAY REPAIR DETAILS
NTS

NOTES ABOUT PAVEMENT RESTORATION:

1. MILL AND OVERLAY OF THE ENTIRE WORK ZONE MAY BE REQUIRED AT THE DIRECTION OF THE BUREAU OF ENGINEERING WHEN SURFACE DISTURBANCE IS LESS THAN 10%, BUT WILL BE REQUIRED WITHOUT EXCEPTION WHEN DISTURBANCE EXCEEDS 25% REGARDLESS OF AGE OF STREET SURFACE.
2. WHEN A NEWLY SURFACED (3 YEARS OR LESS) STREET IS EXCAVATED, THE PERMITTEE SHALL MILL AND OVERLAY THE ENTIRE BLOCK, CURB TO CURB, UNLESS DIRECTED OTHERWISE BY THE BUREAU OF ENGINEERING. WHEN AUTHORIZED BY THE BUREAU OF ENGINEERING, PREMITTEE SHALL MILL AND OVERLAY CURB TO CURB FOR A MINIMUM OF 10' IN EACH DIRECTION BEYOND THE LIMITS OF DISTURBANCE.
3. OVERLAY TRANSITION PAVING NOTCH SHALL CONFORM TO PENNDOT PUB. 72M, RC-28.
4. NOTICE MUST BE PROVIDED TO THE BUREAU OF ENGINEERING FOR ANY PAVING WORK WITHIN THE CITY
5. PAVING RESTORATION SHALL BE AT THE DIRECTION OF THE BUREAU OF ENGINEERING
6. NO VIBRATORY ROLLING IS ALLOWED WITHIN CITY LIMITS, BUT THE REQUIRED COMPACTION REQUIREMENTS WILL STILL NEED TO BE MET. IN ADDITION, NO SHUTTLE BUGGIES OR SPECIAL PERMISSION SIZED LOADS SHOULD BE DRIVEN IN THE CITY DUE TO THE AGE AND CONDITION OF EXISTING UTILITIES AND SERVICE CONNECTIONS.
7. ALL MATERIALS/PRODUCTS AND CONSTRUCTION/INSTALLATION SHALL COMPLY WITH PENNDOT PUBLICATION 408, SPECIFICATIONS, LATEST EDITION

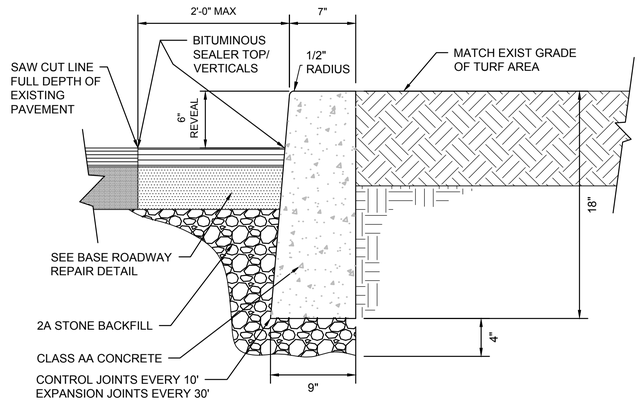

NOTE:
1. MINIMUM CURB REPLACEMENT IS A 4' SECTION

2 CONCRETE CURB REPLACEMENT
NTS

TO BE ADDED

3 STONE LEVEL SPREADER DETAIL
NTS

NO.	DSGN	DATE	REVISION	DR	CHK	APVD	BY	APVD
				S.TUSA	T.HEERS	S.BECK		A.POTTS

©CH2M HILL 2015 ALL RIGHTS RESERVED.
THIS DOCUMENT AND THE IDEAS AND DESIGNS INCORPORATED HEREIN, AS AN INSTRUMENT OF PROFESSIONAL SERVICE, IS THE PROPERTY OF CH2M HILL AND IS NOT TO BE USED, IN WHOLE OR IN PART, FOR ANY OTHER PROJECT WITHOUT THE WRITTEN AUTHORIZATION OF CH2M HILL.

BELLEVUE PARK POND RETROFIT
BELLEVUE PARK
CAPITAL REGION WATER (CRW)
HARRISBURG, PENNSYLVANIA

Jacobs

CIVIL
DETAILS

REUSE OF DOCUMENTS: THIS DOCUMENT AND THE IDEAS AND DESIGNS INCORPORATED HEREIN, AS AN INSTRUMENT OF PROFESSIONAL SERVICE, IS THE PROPERTY OF CH2M HILL AND IS NOT TO BE USED, IN WHOLE OR IN PART, FOR ANY OTHER PROJECT WITHOUT THE WRITTEN AUTHORIZATION OF CH2M HILL.

100% REVIEW SET - NOT FOR CONSTRUCTION

AS NOTED
VERIFY SCALE
BAR IS ONE INCH ON ORIGINAL DRAWING.
0 1"

DATE	OCTOBER 2021
PROJ	D3236600
DWG	C-13
SHEET	15of 22

Land Studies

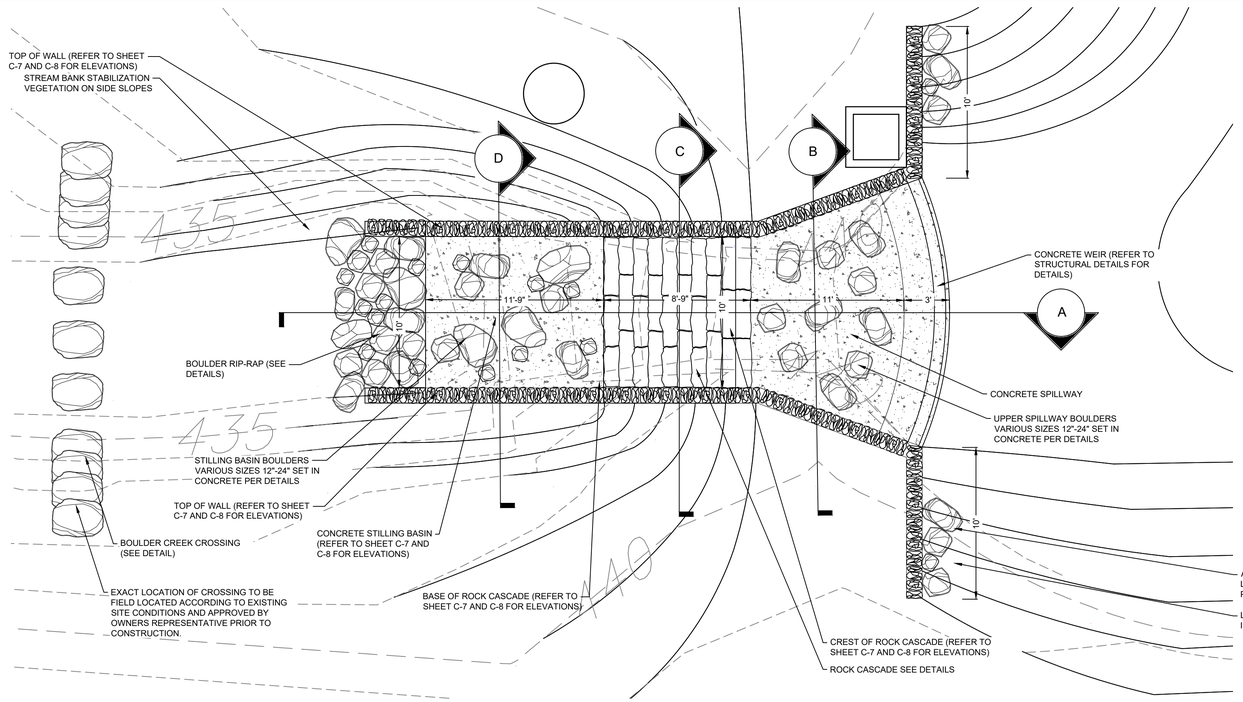

1 / 16 SPILLWAY ENLARGEMENT

SCALE: 1" = 5'

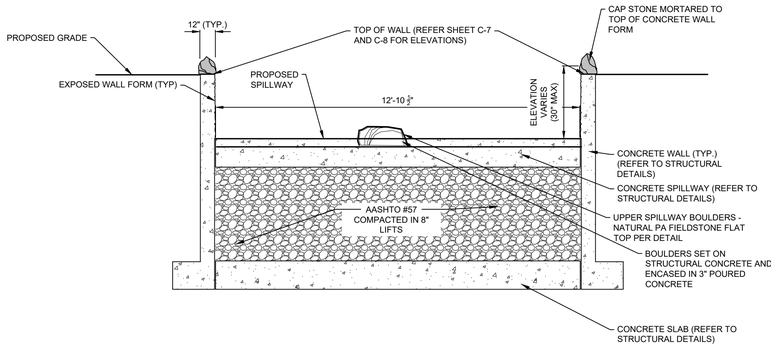

B LOWER POND SPILLWAY SECTION

NOT TO SCALE

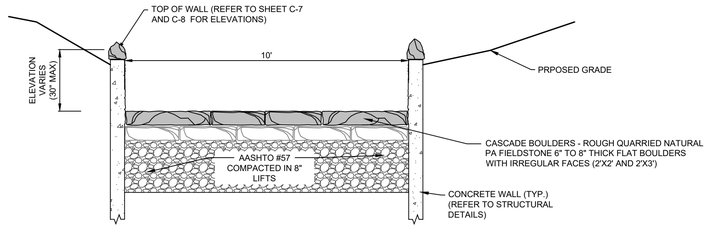

CAP STONE ENLARGEMENT

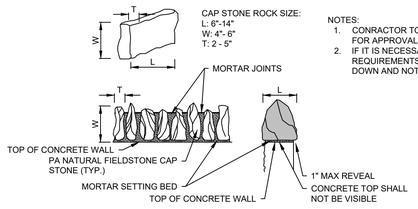

NOTES:
1. CONRACTOR TO MOCK UP 2 LF OF CAP STONE FOR APPROVAL BY PRIOR TO COMPLETEING
2. IF IT IS NECESSARY TO CUT STONE TO MEET SIZE REQUIREMENTS, CUT EDGE SHALL BE FACED DOWN AND NOT BE VISIBLE ABOVE GRADE.

NOTES:
1. THE DESIGN INTENT IS TO RESEMBLE STONE/BOULDER OUTCROP FORMATIONS AS SEEN IN THE NATURAL ENVIRONMENT AND AS DETAILED. THE CONTRACTOR SHALL PROVIDE A MOCK UP CASCADE BOULDERS AND ALL OTHER ROCK PLACEMENT ON-SITE FOR REVIEW AND APPROVAL BY THE OWNERS REPRESENTATIVE. BOULDERS ARE TO BE PLACED INTO GRADE AS DEPICTED IN SECTION. SEE SPEC'S FOR ADDITIONAL BOULDER INFORMATION.
2. REFER TO PLAN LANDSCAPE PLAN AND SPILLWAY ENLARGEMENT FOR LOCATIONS OF BOULDER OUTCROPS

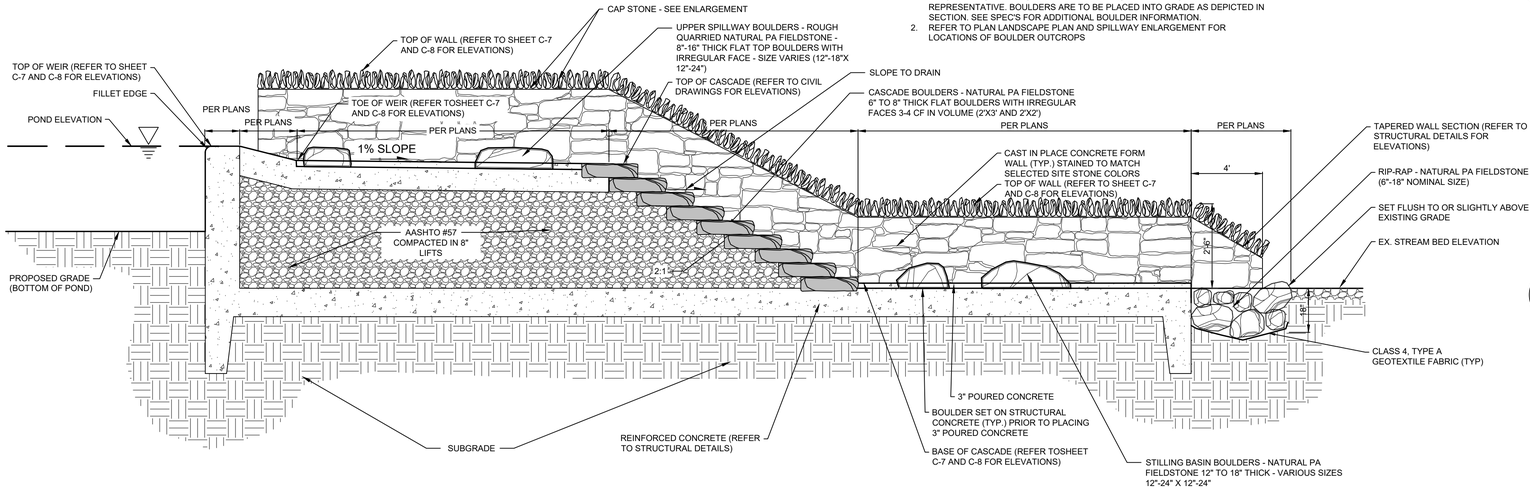

A LOWER POND SPILLWAY PROFILE

NOT TO SCALE

C LOWER POND SPILLWAY SECTION

NOT TO SCALE

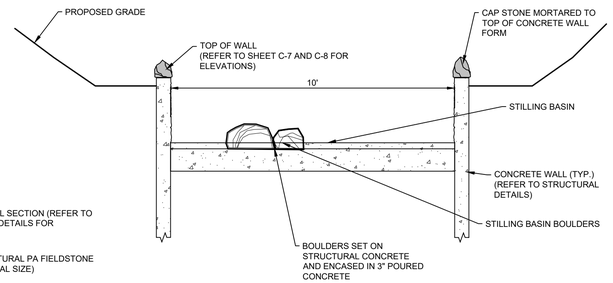

D LOWER POND SPILLWAY SECTION

NOT TO SCALE

NO.	DESIGN	DATE	REVISION	DR	CHK	BY	APVD

©CH2M HILL 2015. ALL RIGHTS RESERVED.

CAPITAL REGION WATER

BELLEVUE PARK POND RETROFIT
BELLEVUE PARK
CAPITAL REGION WATER (CRW)
HARRISBURG, PENNSYLVANIA

THIS DOCUMENT, AND THE IDEAS AND DESIGNS INCORPORATED HEREIN, AS AN INSTRUMENT OF PROFESSIONAL SERVICE, IS THE PROPERTY OF CH2M HILL AND IS NOT TO BE USED, IN WHOLE OR IN PART, FOR ANY OTHER PROJECT WITHOUT THE WRITTEN AUTHORIZATION OF CH2M HILL.

REUSE OF DOCUMENTS:

JACOBS

LOWER POND SPILLWAY DETAILS

100% REVIEW SET - NOT FOR CONSTRUCTION

VERIFY SCALE

BAR IS ONE INCH ON ORIGINAL DRAWING
0 1"

DATE	OCTOBER 2021
PROJ	D3236600
DWG	C-14
SHEET	16 of 22

Land studies

FILENAME: PLOT DATE: PLOT TIME:

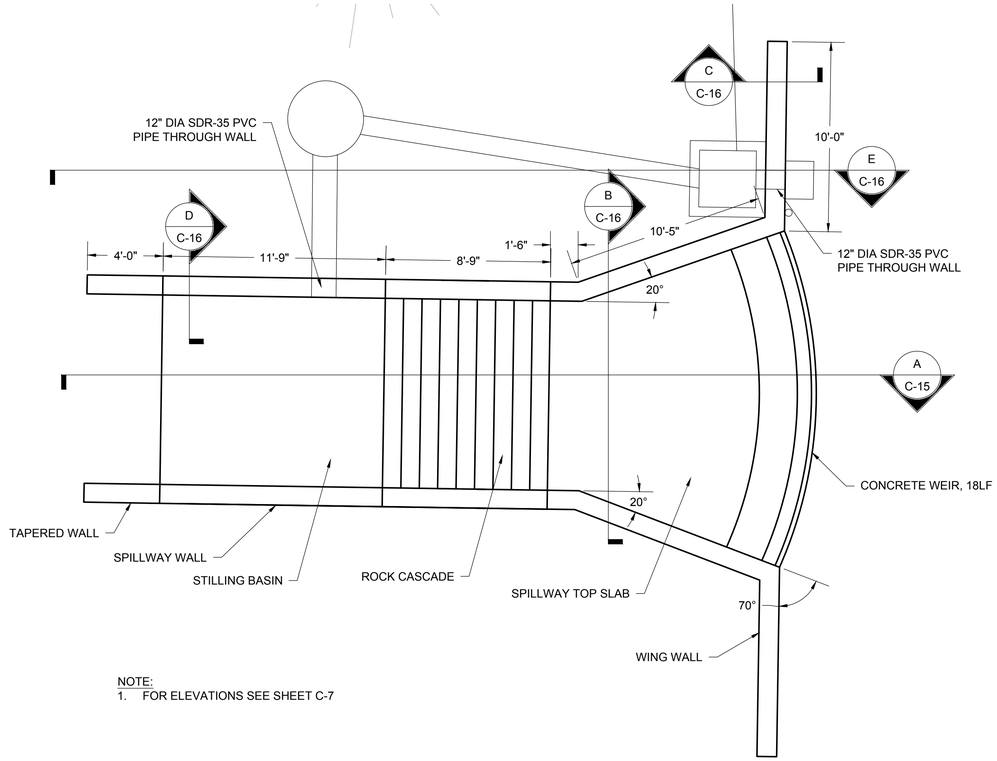

NOTE:
1. FOR ELEVATIONS SEE SHEET C-7

1 LOWER POND SPILLWAY STRUCTURAL PLAN
1" = 4'-0"

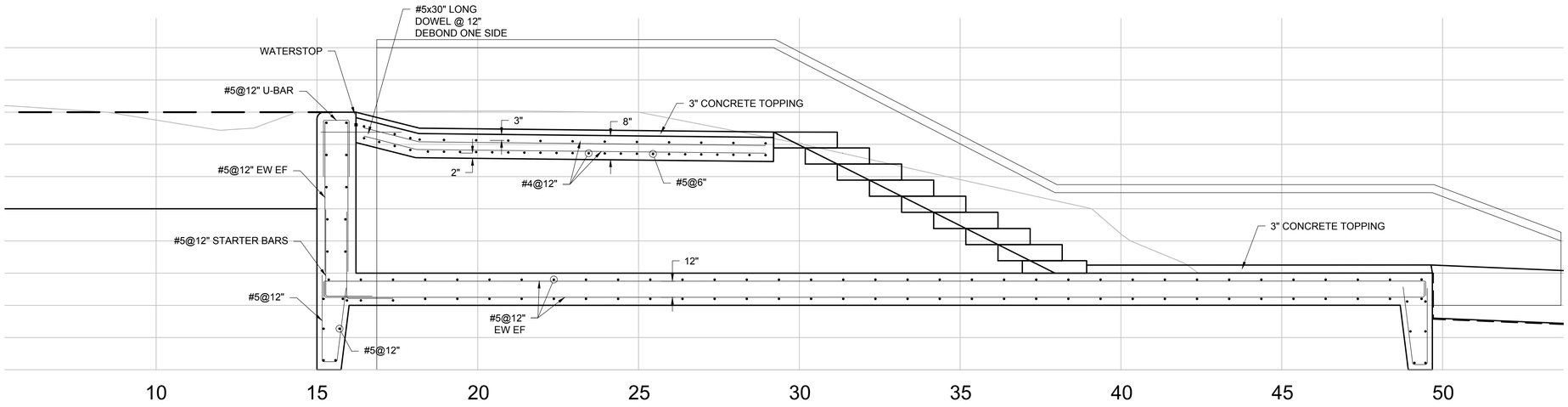

A LOWER POND SPILLWAY CROSS SECTION
1/2" = 1'-0"

NOTES:
1. CONCRETE COMPRESSIVE STRENGTH 4000PSI AT 28 DAYS
2. MINIMUM COVER SHALL BE 3" UNLESS NOTED OTHERWISE

NO.	DATE	REVISION	DR	CHK	APVD	BY
DSGN	S TURSI	B KLEIN	S BECK	APVD	A POTTS	

©CH2M HILL 2015. ALL RIGHTS RESERVED.
THIS DOCUMENT, AND THE IDEAS AND DESIGNS INCORPORATED HEREIN, AS AN INSTRUMENT OF PROFESSIONAL SERVICE, IS THE PROPERTY OF CH2M HILL AND IS NOT TO BE USED, IN WHOLE OR IN PART, FOR ANY OTHER PROJECT WITHOUT THE WRITTEN AUTHORIZATION OF CH2M HILL.
REUSE OF DOCUMENTS:

100% REVIEW SET - NOT FOR CONSTRUCTION

CAPITAL REGION WATER

BELLEVUE PARK POND RETROFIT
BELLEVUE PARK
CAPITAL REGION WATER (CRW)
HARRISBURG, PENNSYLVANIA

Jacobs

CIVIL

STRUCTURAL DETAILS

Land studies

VERIFY SCALE
BAR IS ONE INCH ON ORIGINAL DRAWING.
0 1"

DATE	OCTOBER 2021
PROJ	D3236600
DWG	C-15
SHEET	16 of 22

FILENAME: C-15_D3236600.dwg PLOT DATE: 10/7/2021 PLOT TIME: 3:15:43 PM

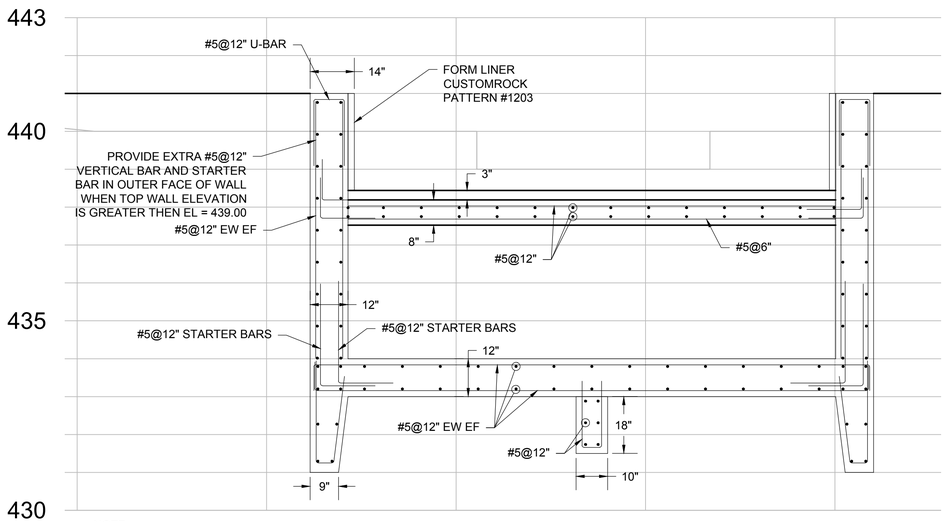

NOTE:
1. OTHER SECTIONS HAVE SIMILAR REINFORCEMENT LAYOUT

B LOWER POND SPILLWAY SECTION
1/2" = 1'-0"

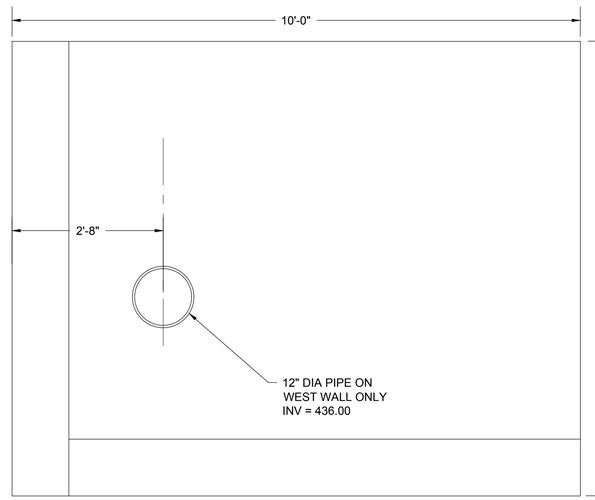

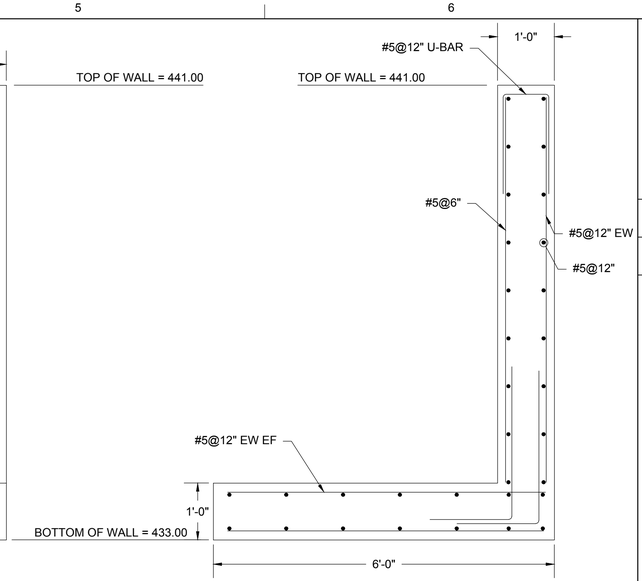

C WING WALL
3/4" = 1'-0"

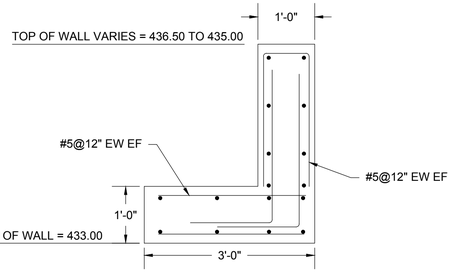

D TAPERED WALL
3/4" = 1'-0"

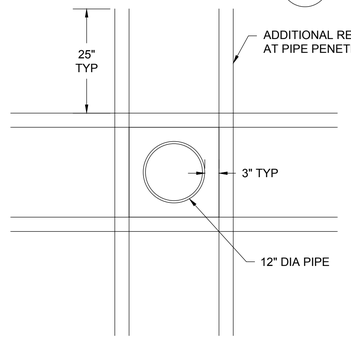

1 WALL PENETRATION DETAIL
3/4" = 1'-0"

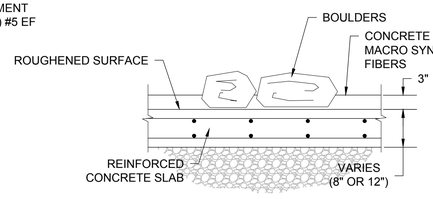

TYPICAL CONCRETE SLAB SECTION AT TOP OF SPILLWAY AND STILLING BASIN
2
3/4" = 1'-0"

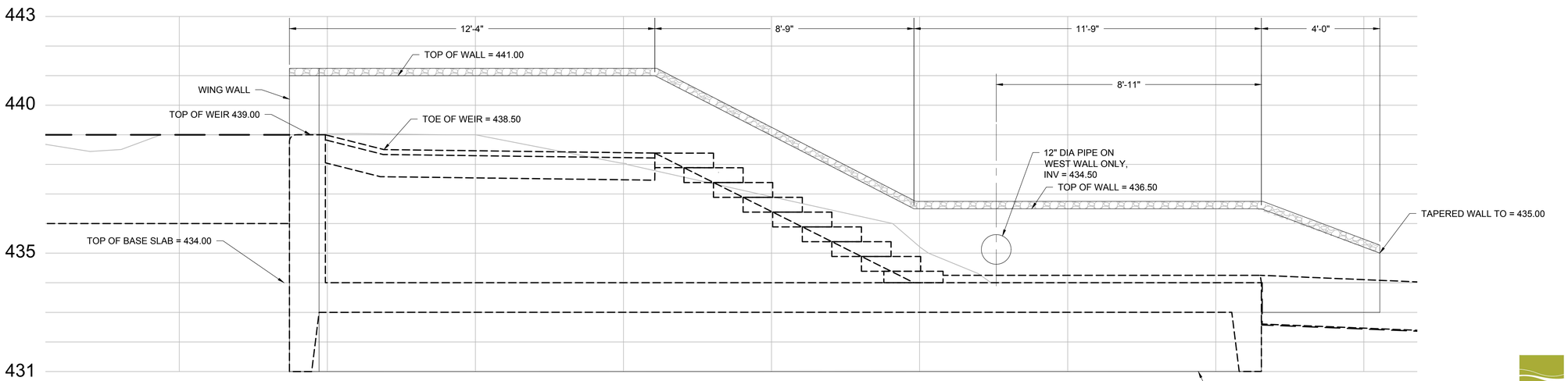

NOTES:
1. CONCRETE COMPRESSIVE STRENGTH 4000PSI AT 28 DAYS
2. MINIMUM COVER SHALL BE 3" UNLESS NOTED OTHERWISE

E SPILLWAY SIDEWALL PROFILE
1/2" = 1'-0"

NO.	DATE	REVISION	BY	APVD
DSGN	E BLANCH	DR B KLEIN	CHK S BECK	APVD A POTTS

©CH2M HILL 2015. ALL RIGHTS RESERVED.
THIS DOCUMENT, AND THE IDEAS AND DESIGNS INCORPORATED HEREIN, AS AN INSTRUMENT OF PROFESSIONAL SERVICE, IS THE PROPERTY OF CH2M HILL AND IS NOT TO BE USED, IN WHOLE OR IN PART, FOR ANY OTHER PROJECT WITHOUT THE WRITTEN AUTHORIZATION OF CH2M HILL.
REUSE OF DOCUMENTS:

CAPITAL REGION | WATER

BELLEVUE PARK POND RETROFIT
BELLEVUE PARK
CAPITAL REGION WATER (CRW)
HARRISBURG, PENNSYLVANIA

Jacobs

STRUCTURAL
STRUCTURAL DETAILS

Land studies

100% REVIEW SET - NOT FOR CONSTRUCTION

AS NOTED	
VERIFY SCALE	
BAR IS ONE INCH ON ORIGINAL DRAWING. 0 1"	
DATE	OCTOBER 2021
PROJ	D3236600
DWG	C-16
SHEET	18 of 22

FILENAME: C-16_D3236600.dwg PLOT DATE: 10/7/2021 PLOT TIME: 3:14:34 PM

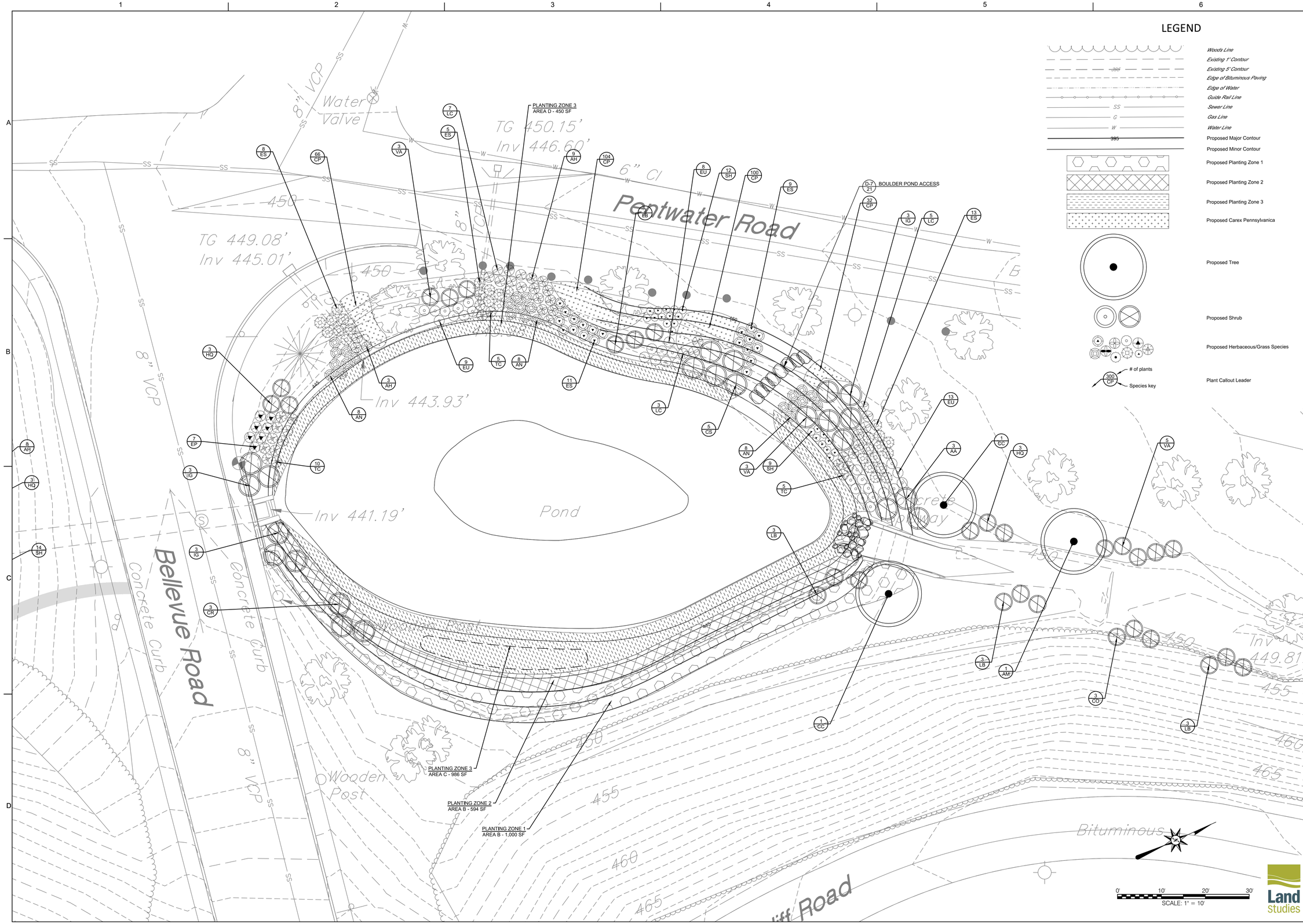

LEGEND

- Woods Line
- Existing 1' Contour
- Existing 5' Contour
- Edge of Bituminous Paving
- Edge of Water
- Guide Rail Line
- Sewer Line
- Gas Line
- Water Line
- Proposed Major Contour
- Proposed Minor Contour
- Proposed Planting Zone 1
- Proposed Planting Zone 2
- Proposed Planting Zone 3
- Proposed Carex Pennsylvanica
- Proposed Tree
- Proposed Shrub
- Proposed Herbaceous/Grass Species
- Plant Callout Leader (# of plants / Species key)

NO.	DATE	REVISION	BY	APVD
DSGN	DR	CHK	APVD	

CAPITAL REGION WATER

BELLEVUE PARK POND RETROFIT
BELLEVUE PARK
CAPITAL REGION WATER (CRW)
HARRISBURG, PENNSYLVANIA

JACOBS

LANDSCAPE PLAN (UPPER POND)

1"=10'

VERIFY SCALE

BAR IS ONE INCH ON ORIGINAL DRAWING.
0 1"

DATE	OCTOBER 2021
PROJ	D3236600
DWG	L-1
SHEET	19 of 22

Land Studies

100% REVIEW SET - NOT FOR CONSTRUCTION

REUSE OF DOCUMENTS: THIS DOCUMENT, AND THE IDEAS AND DESIGNS INCORPORATED HEREIN, AS AN INSTRUMENT OF PROFESSIONAL SERVICE, IS THE PROPERTY OF CH2M HILL AND IS NOT TO BE USED, IN WHOLE OR IN PART, FOR ANY OTHER PROJECT WITHOUT THE WRITTEN AUTHORIZATION OF CH2M HILL.

©CH2M HILL 2015. ALL RIGHTS RESERVED.

FILENAME: PLOT DATE: PLOT TIME:

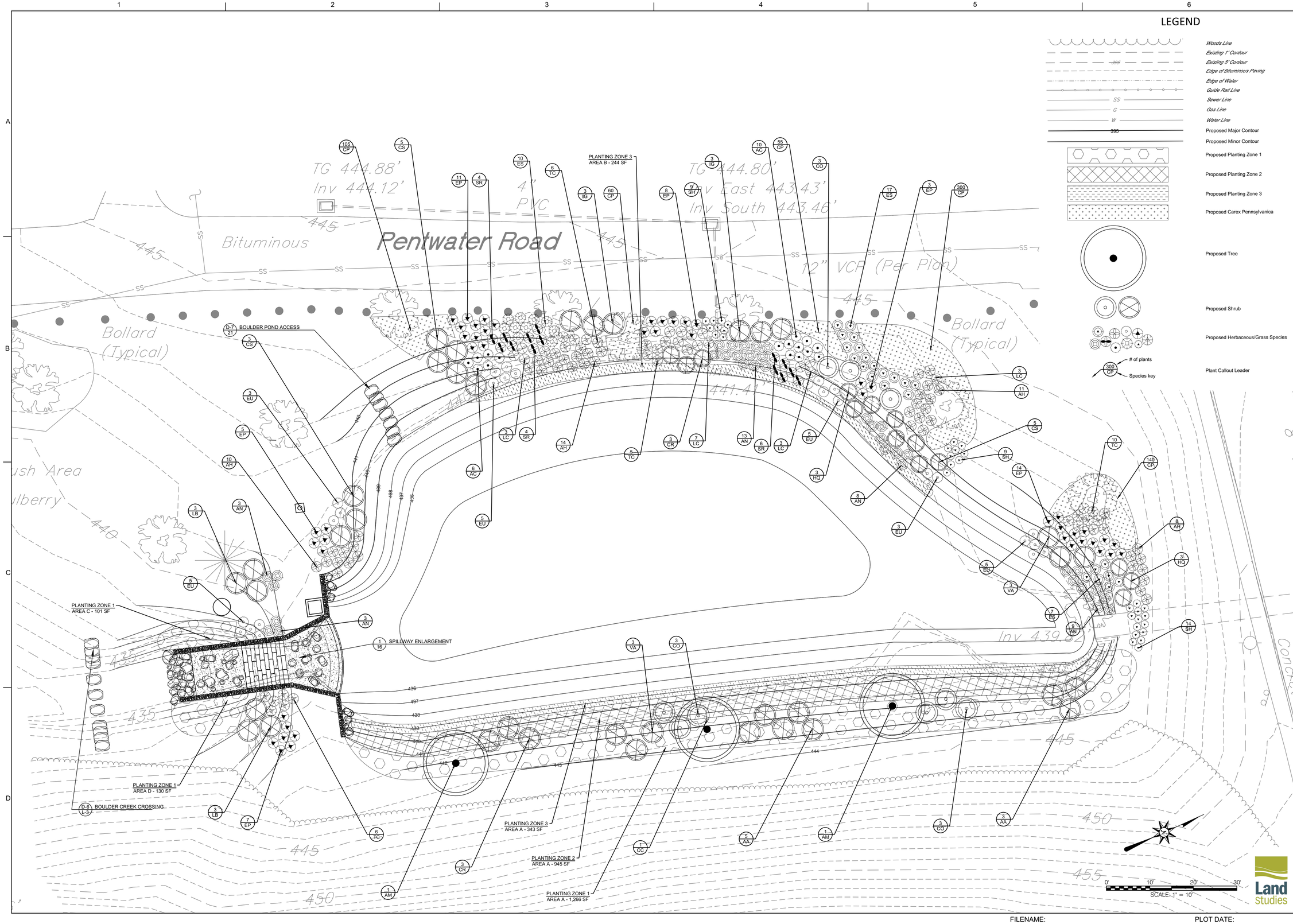

NO.	DATE	DSGN	REVISION	CHK	BY	APVD

CAPITAL REGION | WATER

BELLEVUE PARK POND RETROFIT
BELLEVUE PARK
CAPITAL REGION WATER (CRW)
HARRISBURG, PENNSYLVANIA

JACOBS

LANDSCAPE PLAN (LOWER POND)

1"=10'

VERIFY SCALE

BAR IS ONE INCH ON ORIGINAL DRAWING.
0 1"

DATE	OCTOBER 2021
PROJ	D3236600
DWG	L-2
SHEET	20 of 22

Land Studies

FILENAME: PLOT DATE: PLOT TIME:

©CH2M HILL 2015. ALL RIGHTS RESERVED.
THIS DOCUMENT, AND THE IDEAS AND DESIGNS INCORPORATED HEREIN, AS AN INSTRUMENT OF PROFESSIONAL SERVICE, IS THE PROPERTY OF CH2M HILL AND IS NOT TO BE USED, IN WHOLE OR IN PART, FOR ANY OTHER PROJECT WITHOUT THE WRITTEN AUTHORIZATION OF CH2M HILL.
REUSE OF DOCUMENTS:

100% REVIEW SET - NOT FOR CONSTRUCTION

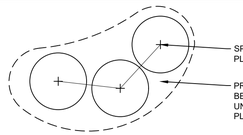

PLAN

NOTES:
1. ROOTBALL OF CONTAINERIZED SHRUBS SHALL BE SCARIFIED PRIOR TO TOPSOIL BACKFILL
2. SAUCERS REQUIRED FOR INDIVIDUALLY MULCHED SHRUBS 4' OR LARGER. NO SAUCERS REQUIRED FOR CONTINUOUS MULCH BEDS.
3. REFER TO LANDSCAPE/PLANTING NOTES AND SPECIFICATIONS

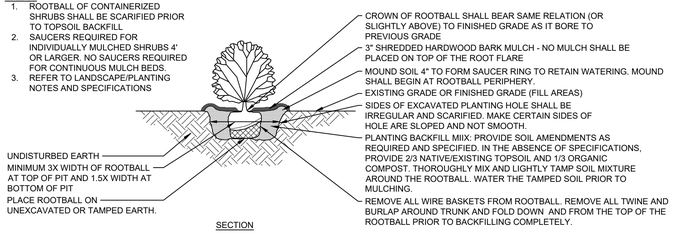

SECTION

D-1 / 21 TYPICAL SHRUB PLANTING

NOT TO SCALE

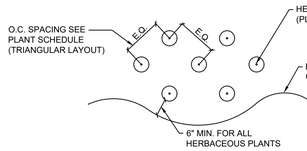

PLANT LAYOUT

NOTES:
1. THE ENTIRE PLANTING BE SHALL BE WATERED PRIOR TO INSTALLATION OF MULCH
2. REFER TO LANDSCAPE/PLANTING NOTES AND SPECIFICATIONS

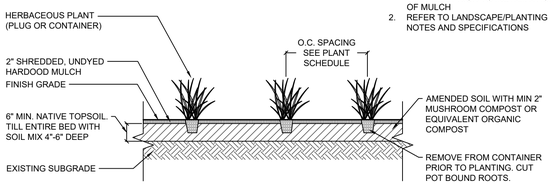

D-2 / 21 HERBACEOUS CONTAINER PLANTING - MULCHED BED

NOT TO SCALE

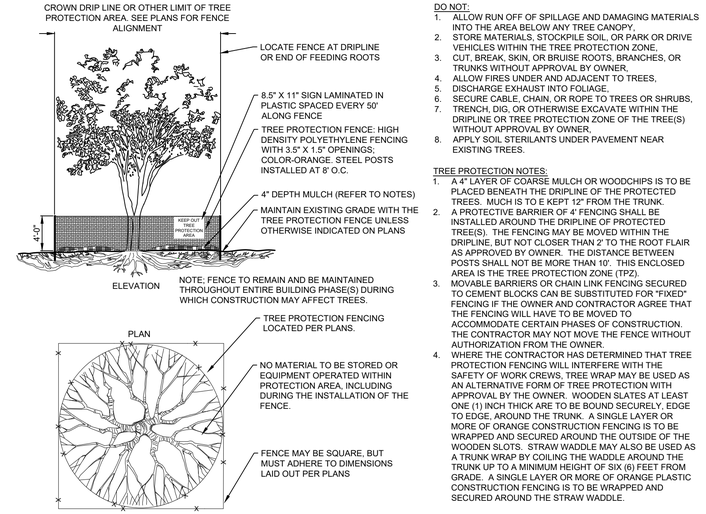

DO NOT:
1. ALLOW RUN OFF OF SPILLAGE AND DAMAGING MATERIALS INTO THE AREA BELOW ANY TREE CANOPY,
2. STORE MATERIALS, STOCKPILE SOIL, OR PARK OR DRIVE VEHICLES WITHIN THE TREE PROTECTION ZONE.
3. CUT, BREAK, SKIN, OR BRUISE ROOTS, BRANCHES, OR TRUNKS WITHOUT APPROVAL BY OWNER,
4. ALLOW FIRES UNDER AND ADJACENT TO TREES,
5. DISCHARGE EXHAUST INTO FOLIAGE,
6. SECURE CABLE, CHAIN, OR ROPE TO TREES OR SHRUBS,
7. TRENCH, DIG, OR OTHERWISE EXCAVATE WITHIN THE DRIPLINE OR TREE PROTECTION ZONE OF THE TREE(S) WITHOUT APPROVAL BY OWNER,
8. APPLY SOIL STERILANTS UNDER PAVEMENT NEAR EXISTING TREES.

TREE PROTECTION NOTES:
1. A 4" LAYER OF COARSE MULCH OR WOODCHIPS IS TO BE PLACED BENEATH THE DRIPLINE OF THE PROTECTED TREES. MUCH IS TO E KEPT 12" FROM THE TRUNK.
2. A PROTECTIVE BARRIER OF 4' FENCING SHALL BE INSTALLED AROUND THE DRIPLINE OF PROTECTED TREE(S). THE FENCING MAY BE MOVED WITHIN THE DRIPLINE, BUT NOT CLOSER THAN 2' TO THE ROOT FLAIR AS APPROVED BY OWNER. THE DISTANCE BETWEEN POSTS SHALL NOT BE MORE THAN 10'. THIS ENCLOSED AREA IS THE TREE PROTECTION ZONE (TPZ).
3. MOVABLE BARRIERS OR CHAIN LINK FENCING SECURED TO CEMENT BLOCKS CAN BE SUBSTITUTED FOR "FIXED" FENCING IF THE OWNER AND CONTRACTOR AGREE THAT THE FENCING WILL HAVE TO BE MOVED TO ACCOMMODATE CERTAIN PHASES OF CONSTRUCTION. THE CONTRACTOR MAY NOT MOVE THE FENCE WITHOUT AUTHORIZATION FROM THE OWNER.
4. WHERE THE CONTRACTOR HAS DETERMINED THAT TREE PROTECTION FENCING WILL INTERFERE WITH THE SAFETY OF WORK CREWS, TREE WRAP MAY BE USED AS AN ALTERNATIVE FORM OF TREE PROTECTION WITH APPROVAL BY THE OWNER. WOODEN SLATES AT LEAST ONE (1) INCH THICK ARE TO BE BOUND SECURELY, EDGE TO EDGE, AROUND THE TRUNK. A SINGLE LAYER OR MORE OF ORANGE CONSTRUCTION FENCING IS TO BE WRAPPED AND SECURED AROUND THE OUTSIDE OF THE WOODEN SLOTS. STRAW WADDLE MAY ALSO BE USED AS A TRUNK WRAP BY COILING THE WADDLE AROUND THE TRUNK UP TO A MINIMUM HEIGHT OF SIX (6) FEET FROM GRADE. A SINGLE LAYER OR MORE OF ORANGE PLASTIC CONSTRUCTION FENCING IS TO BE WRAPPED AND SECURED AROUND THE STRAW WADDLE.

NOTES:
1. TABLE 1: GUIDELINES FOR TREE PROTECTION ZONES TO BE POPULATED FROM FIELD DATA AND PENN STATE EXTENSION'S: A GUIDELINE TO PRESERVING TREES IN DEVELOPMENT PROJECTS

D-3 / 21 TREE PROTECTION: ORANGE CONSTRUCTION FENCING

NOT TO SCALE

NOTES:
1. STAKING OF TREE MAY BE REQUIRED IF ROOT BALL OF TREE BECOMES LOOSE DURING PLANTING. THE OWNER'S REPRESENTATIVE SHALL HAVE THE AUTHORITY TO REQUIRE THAT TREES ARE STAKED OR TO REJECT STAKING AS AN ALTERNATIVE WAY TO STABILIZE THE TREE.
2. REMOVE ALL STAKES AND GUYING AFTER ONE COMPLETE GROWING SEASON
3. DO NOT CUT LEADERS. PROVIDE CORRECTIVE PRUNING (DAMAGES AND CONFLICTING BRANCHES) AFTER TREE IS PLANTIED
4. TRUNK CALIPER SHALL MEET ANSI Z60.1 CURRENT EDITION FOR ROOTBALL SIZE
5. REFER TO LANDSCAPE/PLANTING NOTES AND SPECIFICATIONS

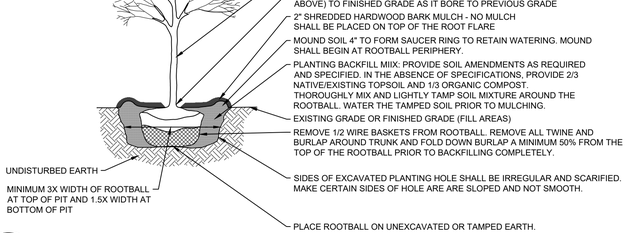

D-4 / 21 DECIDUOUS TREE PLANTING

NOT TO SCALE

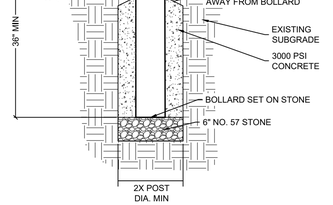

D-5 / 21 TIMBER BOLLARD POST

NOT TO SCALE

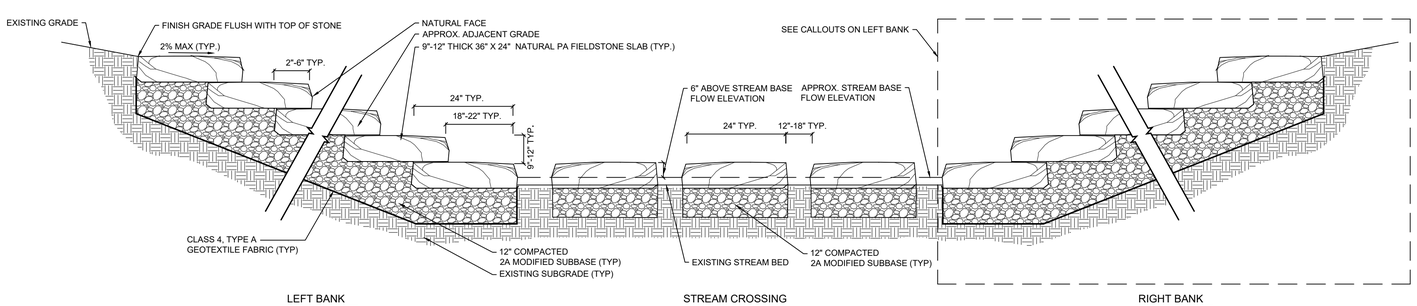

D-6 / 21 BOULDER CREEK CROSSING

NOT TO SCALE

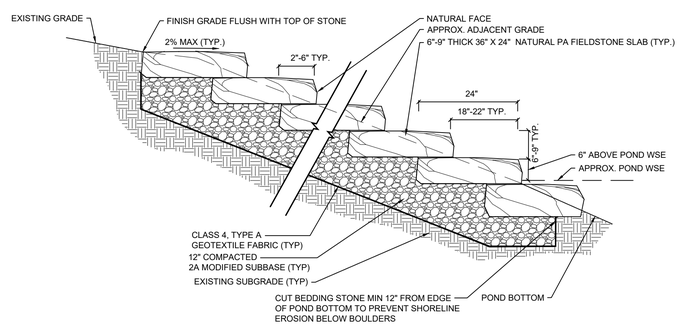

D-7 / 21 BOULDER POND ACCESS

NOT TO SCALE

NO.	DSGN	DATE	DR	CHK	APVD	BY	REVISION

©CH2M HILL 2015. ALL RIGHTS RESERVED.
THIS DOCUMENT, AND THE IDEAS AND DESIGNS INCORPORATED HEREIN, AS AN INSTRUMENT OF PROFESSIONAL SERVICE, IS THE PROPERTY OF CH2M HILL AND IS NOT TO BE USED, IN WHOLE OR IN PART, FOR ANY OTHER PROJECT WITHOUT THE WRITTEN AUTHORIZATION OF CH2M HILL.

CAPITAL REGION WATER

BELLEVUE PARK POND RETROFIT
BELLEVUE PARK
CAPITAL REGION WATER (CRW)
HARRISBURG, PENNSYLVANIA

JACOBS

LANDSCAPE DETAILS

REUSE OF DOCUMENTS:

100% REVIEW SET - NOT FOR CONSTRUCTION

Land studies

VERIFY SCALE
BAR IS ONE INCH ON ORIGINAL DRAWING.
0 1"

DATE	MARCH 2021
PROJ	D3236600
DWG	L-3
SHEET	21 of 22

FILENAME: PLOT DATE: PLOT TIME:

Zone 1: Upland

KEY	BOTANICAL NAME	COMMON NAME	QTY	SIZE	CONDITION	SPACING	Area A	Area B
AH	*Amsonia hubrichtii*	Threadleaf Bluestar	100	DP50	Cont.	See Plans or 24" O.C.	25	20
SH	*Sporobolus heterlepis*	praire dropseed	100	DP50	Cont.	See Plans or 24" O.C.	32	15
AC	*Aquilegia canadensis*	Wild Columbine	100	DP50	Cont.	See Plans or 24" O.C.	57	25
AN	*Aster novae-angliae*	New England Aster	100	DP50	Cont.	See Plans or 24" O.C.	25	15
	Bouteloua curtipendula	Sideoats Grama	50	DP50	Cont.	See Plans or 24" O.C.	40	10
CP	*Carex pensylvanica*	Pennsylvania Sedge	1100	DP50	Cont.	See Plans or 12" O.C.	90	48
EP	*Echinaccea purpurea*	Purple Coneflower	100	DP50	Cont.	See Plans or 24" O.C.	31	14
ES	*Eragrostis spectabilis*	Purple Love Grass	100	DP50	Cont.	See Plans or 24" O.C.	13	10
EU	*Helianthus angustifolius*	Swamp Sunflower	100	DP50	Cont.	See Plans or 24" O.C.	29	15
TC	*Tiarella cordifolia*	Heartleaf Foamflower	100	DP50	Cont.	See Plans or 24" O.C.	40	13
	Asarum canadense	wild ginger	50	DP50	Cont.	See Plans or 24" O.C.	35	15
	Polygonatum biflorum	Soloman's seal	50	DP50	Cont.	See Plans or 24" O.C.	30	20
	Aster divaricatus	white wood aster	50	DP50	Cont.	See Plans or 24" O.C.	30	20
SR	*Solidago rugosa*	Goldenrod	50	DP50	Cont.	See Plans or 24" O.C.	21	15
LC	*Lobelia cardinalis*	Cardinal Flower	50	DP50	Cont.	See Plans or 24" O.C.	11	8
	Mertensia virginica	Virginia bluebells	50	DP50	Cont.	See Plans or 24" O.C.	35	15
			1950				544	278

Notes:
1. Zone 1 to be installed in areas min 18" above WSE
2. Unless noted otherwise, species shall be planted in groups of 3's, 5's, or 7's

Zone 2: Emergent/Wetland

BOTANICAL NAME	COMMON NAME	Total QTY	SIZE	CONDITION	SPACING	Area A	Area B	Area C	Area D
Asclepia incarnata	Swamp Milkweed	50	DP50	Cont.	18-24" O.C.	17	15	15	3
Aster novi-belgii	New York Aster	50	DP50	Cont.	18-24" O.C.	19	15	13	3
Eupatorium coelestinum	Mistflower	50	DP50	Cont.	18-24" O.C.	17	15	15	3
Iris versicolor	Blue Flag Iris	50	DP50	Cont.	18-24" O.C.	19	15	13	3
Juncus effusus	Common Rush	50	DP50	Cont.	18-24" O.C.	17	15	15	3
Liatris spicata	Blazing Star	50	DP50	Cont.	18-24" O.C.	17	15	15	3
Lobelia siphilitica	Great Blue Lobelia	50	DP50	Cont.	18-24" O.C.	17	17	13	3
Monarda didyma	Beebalm	50	DP50	Cont.	18-24" O.C.	19	15	13	3
Pycnanthemum tenuifolium	Slender Mountain Mint	50	DP50	Cont.	18-24" O.C.	19	15	13	3
Aruncus dioicus	Goats Beard	50	DP50	Cont.	18-24" O.C.	17	15	15	3
Schoenoplectus pungens	Common Three-Square	50	DP50	Cont.	18-24" O.C.	17	15	13	5
Schoenoplectus tabernaemontani	Softstem Bulrush	50	DP50	Cont.	18-24" O.C.	17	15	13	5
Caltha palustris	Marsh Marigold	50	DP50	Cont.	18-24" O.C.	19	15	13	3
		650				231	197	179	43

Notes:
1. Zone 2 to be installed in water depths less than 2" to max 8" above WSE
2. Species shall be planted in groups of 3's, 5's, or 7's

LANDSCAPE NOTES:

1. THE LANDSCAPE CONTRACTOR SHALL UTILIZE THE LANDSCAPE PLANS AND TECHNICAL SPECIFICATIONS IN THE IMPLEMENTATION OF THE LANDSCAPE WORK FOR THIS PROJECT. IF THERE IS A CONFLICT, TECHNICAL SPECIFICATIONS SHALL TAKE PRECEDENCE.
2. ALL DISTURBED AREAS SHALL BE SEEDED, SODDED, MULCHED OR LANDSCAPED UNLESS INDICATED OTHERWISE.
3. REFER TO PLANS/LIMITS OF DISTURBANCE FOR SEEDING AND PLANTING LIMITS.
4. PROTECT STRUCTURES, UTILITIES, PAVED SURFACES AND OTHER EXISTING IMPROVEMENTS INCLUDING LAWNS/VEGETATED AREAS AND PLANT MATERIAL FROM DAMAGE DURING CONSTRUCTION. CONTRACTOR SHALL REPAIR, RESTORE AND REPLACE DAMAGED MATERIALS IN KIND OR AS APPROVED BY THE OWNER.
5. PRECAUTIONS SHALL BE TAKEN DURING CONSTRUCTION TO ENSURE THE PROTECTION OF ALL EXISTING TREES TO REMAIN. THESE EFFORTS SHALL ENSURE THAT EQUIPMENT DOES NOT DAMAGE TREE TRUNKS OR BRANCHES, ROOT ZONES ARE NOT COMPACTED BY VEHICLES OR CONSTRUCTION MATERIAL, AND THAT GRADE LEVEL WITHIN THE DRIP LINE OF EXISTING TREES IS NOT CHANGED UNLESS APPROVED OTHERWISE.
6. ALL TREES AND SHRUBS TO BE REMOVED SHALL BE MECHANICALLY REMOVED IF IN CONFLICT WITH PROPOSED WORK OR PLANTINGS, UNLESS INDICATED OTHERWISE.
7. CONTRACTOR SHALL VERIFY FINISHED GRADES ARE MET/PROPER DRAINAGE SHALL OCCUR PRIOR TO LAYOUT OF PLANT MATERIAL AND PLANTING. LANDSTUDIES, INC. SHALL BE CONTACTED TO APPROVE FINAL GRADES PRIOR TO PLANTING.
8. ALL PLANT SUBSTITUTIONS SHALL BE APPROVED BY LANDSTUDIES, INC. AND THE OWNER SHOULD LANDSTUDIES DEEM APPROPRIATE.
9. BOTANICAL NAMES SHALL TAKE PRECEDENCE OVER COMMON NAMES FOR ANY AND ALL PLANT MATERIAL.
10. REQUIREMENTS FOR PLANT MATERIAL INCLUDING BUT NOT LIMITED TO MEASUREMENT, BRANCHING, GRADING, QUALITY, BALLING AND BURLAPPING, SHALL CONFORM TO THE STANDARDS RECOMMENDATIONS AND STANDARDS LISTED IN THE AMERICAN STANDARD FOR NURSERY STOCK, ANSI Z60.1, CURRENT EDITION AS AMENDED, PUBLISHED BY AMERICANHORT (FORMALLY THE AMERICAN NURSERY AND LANDSCAPE ASSOCIATION OR ANLA.)
11. ALL PLANTINGS AND PLANTING PROCEDURES INCLUDING STAKING AND GUYING OF TREES SHALL CONFORM TO GOOD NURSERY AND LANDSCAPE PRACTICE AND THE STANDARDS SET FORTH BY THE AMERICAN ASSOCIATION OF NURSERYMEN.
12. UNLESS OTHERWISE SPECIFIED, ALL PLANT MATERIAL SHALL BE TYPICAL OF THEIR SPECIES AND VARIETY, HAVE NORMAL GROWTH HABITS, HAVE WELL DEVELOPED BRANCHES, BE DENSELY FOLIATED, VIGOROUS IN GROWTH, AND POSSESS HEALTHY ROOT SYSTEMS. ALL PLANT MATERIAL SHALL BE FREE OF DISEASE, INSECTS, INSECT EGGS AND LARVAE. PROVIDE SINGLE TRUNK STANDARD TREES UNLESS NOTED OTHERWISE.
13. ALL CONTAINER GROWN NURSERY STOCK SHALL BE HEALTHY, VIGOROUS, WELL ROOTED, AND ESTABLISHED IN THE CONTAINER IN WHICH IT IS GROWING. CONTAINER GROWN NURSERY STOCK SHALL HAVE A WELL-ESTABLISHED ROOT SYSTEM REACHING THE SIDES OF THE CONTAINER TO MAINTAIN A FIRM BALL WHEN THE CONTAINER IS REMOVED, BUT SHALL NOT HAVE EXCESSIVE ROOT GROWTH ENCIRCLING THE INSIDE OF THE CONTAINER
14. ALL PLANTS TO BE NURSERY GROWN IN A CLIMATE SIMILAR TO THAT OF THE PROJECT AS PER SPEC.
15. CONTRACTOR SHALL VERIFY ALL PLANT COUNTS AND LOCATIONS PRIOR TO ORDERING MATERIALS. LANDSTUDIES AND THE OWNER ACCEPT NO RESPONSIBILITY FOR TYPOGRAPHICAL ERRORS OR QUANTITY MISCOUNTS. THE CONTRACTOR IS RESPONSIBLE TO INSTALL ALL PLANTINGS AS INDICATED/REQUIRED, AND SHALL NOTIFY LANDSTUDIES OF ANY DISCREPANCIES PRIOR TO THE START OF WORK.
16. TREES AND SHRUBS SHALL BE PLANTED DURING APPROVED TIMES OF THE YEAR. CONTRACTOR SHALL BE RESPONSIBLE TO IDENTIFY ANY SPECIES ON THE PLANT LIST THAT REQUIRE PLANTING DURING SPECIFIC TIMES OF THE YEAR AND OBTAINING APPROVAL BY THE OWNER AND LANDSTUDIES PRIOR TO PLANTING. PLANT DURING PERIODS NORMAL FOR OPTIMUM GROWTH, AS DETERMINED BY SEASON, WEATHER CONDITIONS, AND ACCEPTED PRACTICE. DO NOT PERFORM PLANTING WHEN GROUND IS FROZEN, SNOW COVERED, OR IN AN UNSATISFACTORY CONDITION.
17. WHEN CONDITIONS DETRIMENTAL TO PLANT GROWTH ARE ENCOUNTERED SUCH AS RUBBLE FILL, ADVERSE DRAINAGE CONDITIONS, POOR SOILS OR OBSTRUCTIONS, NOTIFY LANDSTUDIES BEFORE PLANTING.
18. LAYOUT INDIVIDUAL TREE AND SHRUB LOCATIONS, AND ADJUST LOCATIONS WHEN REQUESTED AND OBTAIN LANDSTUDIES, INC. ACCEPTANCE OF LAYOUT PRIOR TO PLANTING.
19. BIOPLEX 5-IN-1, OR APPROVED EQUAL, SHALL BE APPLIED TO ALL PLANTS DURING INSTALLATION IN ACCORDANCE WITH MANUFACTURER RECOMMENDATIONS.
20. ALL PLANTS SHALL BE PLANTED IN ACCORDANCE WITH THE DETAILS AND SPECIFICATIONS.
21. ALL PLANTING AREAS AND PLANTING PITS TO BE MULCHED SHALL BE MULCHED (AS SPECIFIED AND DETAILED) TO FILL THE ENTIRE PLANTING BED AREA OR PIT. INDIVIDUAL PLANTS NOT LOCATED WITHIN A BED SHALL HAVE A MULCHED CIRCLE. THE SIZE OF THE MULCHED CIRCLE SHALL BE DETERMINED ACCORDING TO THE OVERALL PLANT SIZE OR CALIPER AS DETAILED. CONSULT LANDSTUDIES FOR CLARIFICATION IF REQUIRED. NO MULCH SHALL BE APPLIED AGAINST THE FOLIAGE, STEM, OR TRUNK OF ANY PLANT. MULCH SHALL BE ORGANIC, NATURAL, SHREDDED HARDWOOD BARK, UNLESS APPROVED OTHERWISE.
22. MAINTAIN PROPER WATERING REQUIREMENTS TO ENSURE PLANT ESTABLISHMENT.

PROJECT SPECIFIC NOTES:

1. HERBACEOUS PLANTS OF THE SAME SPECIES SHALL NOT BE PLANTED IN GROUPS THAT EXCEED 7 PLANTS UNLESS OTHERWISE SPECIFIED ON T THE PLANS.
2. PLANT LAYOUT SHALL BE ADJUSTED BASED ON CONSTRUCTED SOIL AND HYDROLOGICAL CONDITIONS BY PROJECT DESIGNER TO BEST MATCH SPECIES WITH CONDITIONS.
3. PLANTING LOCATED WITHIN 1' OF THE POND WATER SURFACE SHALL NOT BE MULCHED WITH HARDWOOD MULCH.
4. ALL DISTURBED AREAS NOT IDENTIFIED TO RECEIVE PLANTINGS SHALL BE PERMANENTLY SEEDED WITH THE LAWN SEED MIX AS SPECIFIED.
5. INVASIVE SPECIES WILL BE REMOVED WITHIN THE PROJECT AREA AND AREAS IMMEDIATELY ADJACENT.

Zone 3: Open Water/Submergent

BOTANICAL NAME	COMMON NAME	QTY	SIZE	CONDITION	SPACING	Area A	Area B	Area C	Area D
Acorus calamus	Sweet Flag	100	DP50	Cont.	24" O.C.	27	25	36	12
Carex stricta	Tussock Sedge	50	DP50	Cont.	24" O.C.	14	12	10	14
Carex vulpinoidea	Fox Sedge	50	DP50	Cont.	24" O.C.	10	10	18	12
Iris versicolor	Blue Flag Iris	100	DP50	Cont.	24" O.C.	25	20	40	15
Juncus effusus	Soft Rush	50	DP50	Cont.	24" O.C.	7	5	26	12
Peltandra virginica	Arrow Arum	50	DP50	Cont.	24" O.C.	7	5	28	10
Pontederia cordata	Pickerelweed	50	DP50	Cont.	24" O.C.	5	7	28	10
Sagittaria latifolia	Duck Potato	50	DP50	Cont.	24" O.C.	9	10	22	9
Scirpus validus	Sofstem Bulrush	100	DP50	Cont.	24" O.C.	22	15	48	15
		600				126	109	256	109

Notes:
1. Zone 3 to be installed in areas 0"-12" below WSE
2. Species shall be planted in groups of 3's, 5's, or 7's

TREES AND SHRUBS

KEY	BOTANICAL NAME	COMMON NAME	QTY	SIZE	CONDITION	SPACING
AA	*Aronia arbutifolia*	Red Chokeberry	11	#2	CONT.	SEE PLANS
CR	*Cornus racemosa*	Grey Dogwood	9	#2	CONT.	SEE PLANS
CS	*Cornus sericea*	Redosier Dogwood	18	#2	CONT.	SEE PLANS
HQ	*Hydrangea quercifolia*	Oakleaf Hydrangea	12	#2	CONT.	SEE PLANS
LB	*Lindera benzoin*	Spicebush	18	#3	CONT.	SEE PLANS
CO	*Cephalanthus occidentalis*	Buttonbush	12	#2	CONT.	SEE PLANS
IG	*Ilex glabra*	Inkberry	15	#2	CONT.	SEE PLANS
VA	*Viburnum acerifolium*	Maple Leaf Viburnum	17	#2	CONT.	SEE PLANS
CC	*Cercis canadensis*	Eastern Redbud	3	#7	CONT.	SEE PLANS
AM	*Amalanchier arborea*	Alegheny Serviceberry	3	#7	CONT.	SEE PLANS

LAWN SEED MIX

%	BOTANICAL NAME	COMMON NAME
30%	*Lolium perenne 'Nobility'*	Nobility Perennial Ryegrass
25%	*Lolium perenne 'Amazing GS'*	Amazing GS Perennial Ryegrass
20%	*Festuca rubra 'Gibralter'*	Gibralter Creeping Red Fescue
20%	*Lolium multiflorum 'Breakout'*	Breakout Annual Rye
5%	*Poa pratensis 'Kelly'*	Kelly Kentucky Bluegrass

Seeding Rate: 8 lbs per 1000 sq ft or 350 lbs per acre

INVASIVE SPECIES MANAGEMENT NOTES

1. EXISTING INVASIVE SPECIES WITHIN THE LIMIT OF DISTURBANCE SHALL BE MANAGED USING THE APPROPRIATE METHODS PER SPECIES AND SITE CONDITIONS PRIOR TO CONSTRUCTION.
2. ADDITIONAL APPLICATIONS OF INVASIVE MANAGEMENT MAY BE NECESSARY TO ERADICATE CERTAIN SPECIES. THE CONTRACTOR SHALL IDENTIFY THESE SPECIES AND PROVIDE A SCHEDULE OF MANAGEMENT TO BE APPROVED BY THE OWNER.
3. KNOWN AND OBSERVED INVASIVE SPECIES FOUND ON SITE INCLUDE
   - NORWAY MAPLE - ABUNDANT, AT LEAST 8 LARGE TREES OBSERVED (OVER 10" DBH) AND DOZENS OF SAPLINGS
   - ENGLISH IVY - ABUNDANT
   - PERWINKLE (V. MAJOR OR MINOR) - ABUNDANT IN POCKETS
   - GARLIC MUSTARD - ABUNDANT
   - BUSH HONEYSUCKLE- ABUNDANT IN POCKETS
   - JAPANESE HONEYSUCKLE - PRESENT IN POCKETS
   - MULTIFLORA ROSE- ABUNDANT
   - WINGED EUONYMUS- PRESENT IN POCKETS
   - PRIVET - ABUNDANT
   - AILANTHUS - PRESENT IN POCKETS
   - WINEBERRY- PRESENT IN POCKETS
   - WHITE MULBERRY- PRESENT IN POCKETS
   - CATCHWEED BEDSTRAW- ABUNDANT
   - CHINESE ELM - PRESENT IN POCKETS
   - GUELDER ROSE - PRESENT IN POCKETS

LANDSCAPE MAINTENANCE NOTES:

THE FOLLOWING NORMAL OPERATIONS AND MAINTENANCE OF THE PROJECT WILL BE REQUIRED TO ALLOW THE SYSTEM TO DEVELOP INTO AND MAINTAIN ITS FULL ECOLOGICAL POTENTIAL. THE PROJECT SHALL BE MONITORED FOR MIN. 5 YEARS; TWICE ANNUALLY FOR THE FIRST TWO YEARS AND ONCE ANNUALLY FOR ADDITIONAL THREE YEARS.

- AVOID ENCROACHMENT INTO THE PONDS AND LANDSCAPE RESTORATION AREA. MANAGE ANY INVASIVE SPECIES THAT MAY TRY TO OUT-COMPETE THE PROPOSED NATIVE RIPARIAN PLANTING COMMUNITY UNTIL VIABLE SUCCESSIONAL PROCESSES CAN NATURALLY BE SUSTAINED. A DESCRIPTION OF BASIC VEGETATION MANAGEMENT PRACTICES IS DESCRIBED BELOW. INVASIVE SPECIES CONTROL SHOULD BE IMPLEMENTED AT A MINIMUM ONE TIME PER YEAR USING THE APPROPRIATE METHODS DESCRIBED BELOW BASED ON SITE CONDITIONS.
- VISUALLY INSPECT THE RESTORED PONDS AND LANDSCAPE AREAS. APPROPRIATE CORRECTIVE MEASURES SHALL BE IDENTIFIED BY A QUALIFIED PROFESSIONAL TO ADDRESS ANY NOTED INSTABILITIES. THE OWNER SHALL BE RESPONSIBLE FOR ANY NECESSARY CORRECTIVE MEASURES.

VEGETATION MAINTENANCE ACTIVITIES SHOULD BE CONDUCTED BY AN INDIVIDUAL WITH A CLEAR UNDERSTANDING OF NATIVE AND NON-NATIVE PLANT IDENTIFICATION. THE FOLLOWING VEGETATION MANAGEMENT ACTIVITIES COULD BE USED TO CONTROL INVASIVE SPECIES AS DICTATED BY SITE CONDITIONS.

SPOT SPRAYING

THE USE OF ANY HERBICIDE OR PESTICIDE MUST BE EXERCISED WITH EXTREME CARE TO PROTECT THE BENEFICIAL PLANTS (NATIVE VOLUNTEER AND PLANTED MATERIAL) AND AQUATIC RESOURCE. THE PLANTING PLAN, PREPARED BY LANDSTUDIES INC. SHOULD BE USED AS A REFERENCE FOR THE PLANTS GROWING WITHIN THE LIMITS OF THE RESTORED FLOODPLAIN. CARE SHOULD BE TAKEN TO PROTECT THESE PLANTS AND TO ENCOURAGE THE GROWTH OF OTHER VOLUNTEER NATIVE PLANT SPECIES. SPOT SPRAYING SHOULD ONLY BE EMPLOYED AFTER THE SEEDED MATERIAL IS ESTABLISHED.

ALL PESTICIDES MUST BE APPLIED BY A PENNSYLVANIA CERTIFIED PESTICIDE APPLICATOR ENDORSED IN CATEGORY 9 AQUATICS. ALL PESTICIDE USE MUST BE IN COMPLIANCE WITH THE PENNSYLVANIA PESTICIDE CONTROL ACT, PENNSYLVANIA DEPARTMENT OF AGRICULTURE BUREAU OF PLANT INDUSTRY, ENVIRONMENTAL PROTECTION AGENCY, PENNSYLVANIA DEPARTMENT OF ENVIRONMENTAL PROTECTION, AND OTHER APPLICABLE REGULATIONS. CONSULT PRODUCT LABELS AND MSDS FOR PROPER USE, SAFETY PRECAUTIONS, APPLICATION RATES, INTENDED USES AND OTHER INFORMATION. LANDSTUDIES IS NOT LIABLE FOR MISUSE OF PESTICIDES BY OTHERS.

SUGGESTED **BROADLEAF SELECTIVE** HERBICIDE, SOMETIMES APPROVED FOR AQUATIC USE:
CHEMICAL NAME: TRICLOPYR; MANUFACTURERS: SEPRO, NUFARM, ETC.

SUGGESTED **NON-SELECTIVE** HERBICIDE, SOMETIMES APPROVED FOR AQUATIC USE:
CHEMICAL NAME: GLYPHOSATE; MANUFACTURERS: NUFARM, BASF, DOW, MONSANTO, ETC.

MOWING

SELECTIVE MOWING MAY BE AN OPTION TO CONTROL CERTAIN INVASIVE PLANT SPECIES. SELECTIVE MOWING WOULD INCLUDE STRING TRIMMING AND EDGE MOWING ONLY AS NECESSARY TO CONTROL INVASIVE PLANTS. MOWING OR STRING TRIMMING IN LATE WINTER MAY BE USED AS A METHOD TO REMOVE OR REDUCE SPENT VEGETATION TO ALLOW FOR REGROWTH.

PRUNING

THE PRUNING OF DEAD MATERIAL FROM THE PLANTINGS IS RECOMMENDED TO MAINTAIN THE HEALTH OF THE PLANTS.

PLANT INDEX

SEE THE PLANT SCHEDULES ON THIS SHEET FOR A LIST OF PLANTS THAT WILL BE PLANTED OR SEEDED AND ARE ANTICIPATED TO BE FOUND AROUND THE PONDS.

ADDITIONAL MAINTENANCE ACTIVITIES

- TRASH AND OTHER DEBRIS SHALL REMOVED ANNUALLY
- ADDRESS DEBRIS JAMS OR OBSTRUCTIONS AS QUICKLY AS POSSIBLE.
- ADDRESS EROSION ISSUES AS QUICKLY AS POSSIBLE
- REPLACE DEAD OR DYING VEGETATION AS NECESSARY

NO.	DATE	REVISION	BY	APVD

DSGN | DR | CHK | APVD

CAPITAL REGION | WATER

BELLEVUE PARK POND RETROFIT
BELLEVUE PARK
CAPITAL REGION WATER (CRW)
HARRISBURG, PENNSYLVANIA

JACOBS

LANDSCAPE SCHEDULE AND NOTES

VERIFY SCALE
BAR IS ONE INCH ON ORIGINAL DRAWING.
0 1"

DATE	MARCH 2021
PROJ	D3236600
DWG	L-4
SHEET	22 of 22

Land Studies

FILENAME: PLOT DATE: PLOT TIME:

100% REVIEW SET - NOT FOR CONSTRUCTION

©CH2M HILL 2015. ALL RIGHTS RESERVED.
REUSE OF DOCUMENTS: THIS DOCUMENT, AND THE IDEAS AND DESIGNS INCORPORATED HEREIN, AS AN INSTRUMENT OF PROFESSIONAL SERVICE, IS THE PROPERTY OF CH2M HILL AND IS NOT TO BE USED, IN WHOLE OR IN PART, FOR ANY OTHER PROJECT WITHOUT THE WRITTEN AUTHORIZATION OF CH2M HILL.